Version 1.00 | 08/23/2023

Hardware Installation Guide

Multi-G Ethernet Smart Managed Switch

DMS-1250 Series

Information in this document is subject to change without notice. Reproduction in any manner whatsoever, without the written permission of D-Link Corporation, is strictly forbidden.

Trademarks used in this text: D-Link and the D-LINK logo are trademarks of D-Link Corporation; Microsoft and Windows are registered trademarks of Microsoft Corporation.

Other trademarks and trade names may be used in this document to refer to either the entities claiming the marks and names or their products. D-Link Corporation disclaims any proprietary interest in trademarks and trade names other than its own.

© 2023 D-Link Corporation. All rights reserved.

April 2023

FCC Compliance Statement

This device complies with Part 15 of the FCC Rules. Operation is subject to the following two conditions: (1) This device may not cause harmful interference, and (2) this device must accept any interference received, including interference that may cause undesired operation.

CE Mark Warning

This equipment is compliant with Class A of CISPR 32. In a residential environment, this equipment may cause radio interference.

VCCI Warning

この装置は、クラス A 機器です。この装置を住宅環境で使用すると電波妨害を引き起こすことがあります。この場合には使用者が適切な対策を講ずるよう要求されることがあります。 VCCI－A

BSMI Notic

警告：為避免電磁干擾，本產品不應安裝或使用於住宅環境。

Safety Compliance

Warning: Class 1 Laser Product: When using a fiber optic media expansion module, never look at the transmit laser while it is powered on. In addition, never look directly at the fiber TX port and fiber cable ends when they are powered on.

Avertissement: Produit Laser de Classe 1: Ne regardez jamais le laser tant qu’il est sous tension. Ne regardez jamais directement le port TX (Tramsmission) à fibres optiques et les embouts de câbles à fibres optiques tant qu’ils sont sous tension.

Ensure to connect the power cord to a socket-outlet with earthing connection.

Veillez à brancher le cordon d'alimentation sur une prise de courant avec mise à la terre.

Table of Contents

Typographical Conventions iv
Notes and Cautions iv
Switch Description 1
Package Contents 1
Features 1
Front Panel Components 2
- Ports 3
- Reset Button 3
- LED Indicators 3

Port Functions 5
Rear Panel Components 6
Side Panel Components 7
- Smart Fans 8

Installation Guidelines 9
Installing the Switch without a Rack 9
Installing the Switch in a Standard 19" Rack 10
Installing Transceivers into the Transceiver Ports 10
Power On (AC Power) 11
- Power Failure (AC Power) 11
- Installing Power Cord Retainer 12

Switch to an End Node 15
Switch to Another Switch 15
Switch to a Server 16
Management Options 17
Connecting to the Console Port 17
- Connecting to the Switch for the First Time 18
- Creating a User Account 19
- Configuring the IP Address 19

Connecting using SNMP 20
- Traps 20
- Management Information Base (MIB) 21

Introduction 22
Logging into the Web UI 22
Web User Interface (Web UI) 24
- Areas of the Web UI 24
- Web Pages 25

Appendix A - Technical Specifications 26
General 26
Physical and Environmental 26
Performance 27
Safety Instructions 28
- Safety Cautions 28

Consignes de sécurité 29
- Précautions de sécurité 29

General Precautions for Rack-Mountable Products 30
Protecting Against Electrostatic Discharge 31
Additional Info 33

Intended Readers

The DMS-1250 Series Multi-G Ethernet Smart Managed Switch Hardware Installation Guide contains detailed information about the hardware specifications of the switches in this series. It also contains brief information on how to configure and manage a switch in this series. This manual is intended for advanced level users that are familiar with network management concepts and terminology. For all practical reasons, all the switches in this series will simply be referred to as the Switch throughout this manual.

Typographical Conventions

Convention	Description
Boldface Font	This convention is used to place emphasis on keywords. It also indicates a button, toolbar icon, menu, menu item, system message, or a prompt appearing on the screen. For example, click the **Apply** button.
Initial capital letter	This convention is used to indicate a window name or keyboard key. For example, press the Enter key.
`Blue Courier Font`	This convention is used to represent a Command Line Interface (CLI) example.

Notes and Cautions

NOTE: A note indicates important information that helps you make better use of your device.

CAUTION: A caution indicates a potential for property damage, personal injury, or death.

1. Introduction

Switch Description
Package Contents
Features
Front Panel Components
Rear Panel Components
Side Panel Components

Switch Description

The DMS-1250 Series is D-Link's next generation Smart Managed Switch. The Switch has a combination of 2.5GBASE-T and SFP+ ports that may be used to connect various networking devices to the Switch. The SFP+ ports are used with fiber-optical transceiver cabling in order to uplink various other networking devices for a 1Gbps or 10 Gbps link that may span great distances.

The D-Link DMS-1250 Series includes the following switches:

- **DMS-1250-10S:** Eight 2.5GE Smart Managed switch with 2 SFP+ ports.
- **DMS-1250-10SP:** Eight 2.5GE POE Smart Managed switch with 2 SFP+ ports.
- **DMS-1250-12TP:** Eight 2.5GE POE Smart Managed switch with 2 SFP+ ports and 2 10GE ports.

Package Contents

Open the shipping carton of the Switch and carefully unpack its contents. The box should contain the following items:

- One DMS-1250 Series switch.
- One Safety Notice.
- One AC power cord.
- One rack mounting kit (two brackets and screws).
- Four rubber feet with adhesive backing.
- One power cord retainer set.

Additional documents based on local regulation requirement (optional).

If any item is missing or damaged, please contact your local D-Link reseller for replacement.

Features

The list of features below highlights the significant features of the Switch.

- Supports a 16K MAC address table.
- Supports Flow Control (802.3x) in full-duplex compliant.
- Supports Jumbo Frames of up to 12KB.
- Supports Spanning Tree with 802.1D 2004 STP/RSTP and 802.1Q 2005 MSTP.
- Supports Loopback Detection (LBD).
- Supports Link Aggregation (802.3ad and 802.3AX) with a maximum of 8 groups per Switch.
- Supports Port Mirroring.
- Supports Layer 2 Multicast Filtering.
- Supports IGMP Snooping (v1, v2, v3 awareness) with up to 256 snooping groups and 128 static multicast addresses. MLD Snooping (v1, v2 awareness) with up to 256 snooping groups and 64 static multicast addresses. IGMP Snooping and MLD Snooping share 128 static groups and 256 snooping groups.
- Supports Virtual LAN (802.1Q) with up to 4K VLAN groups.
- Supports Port-based VLAN.
- Supports Asymmetric VLAN.
- Supports Auto Voice and Surveillance VLAN.

- Supports IPv4/IPv6 interfaces.
- Supports Static Routing.
- Supports Quality of Service (QoS) with Queue Handling and Class of Service (CoS).
- Supports Access Control List (ACL).
- Supports Secure Shell (SSHv2) with IPv4/IPv6 access.
- Support Transport Layer Security (TLS) versions 1.3.
- Supports Port Security of up to 64 MAC addresses per port.
- Supports Broadcast and Multicast Storm Control.
- Supports Traffic Segmentation.
- Supports D-Link SafeGuard Engine.
- Supports ARP Spoofing Prevention.
- Supports IP-MAC-Port Binding (IMPB). This feature includes DHCP Snooping, IP Source Guard, Dynamic ARP Inspection, DHCPv6 Guard, RA Guard, IPv6 Snooping, IPv6 Source Guard, IPv6 ND Snooping, and IPv6 ND Inspection.
- Supports DoS Attack Prevention.
- Supports Port-based Network Access Control (PNAC) better known as 802.1X. This feature includes Local and RADIUS database, and Port-based Access Control.
- Supports Guest VLAN.
- Supports Link Layer Discovery Protocol (LLDP) with LLDP-MED.
- Supports Accessibility using multiple interfaces like the Command Line Interface (CLI), Web-based Graphical User Interface (Web-based GUI), and more.
- Supports Telnet Server.
- Supports Trivial File Transfer Protocol (TFTP) Client.
- Supports Simple Network Management Protocol (SNMP) version 1, 2c, and 3.
- Supports DHCP Client.
- Support Dual Images and Configurations.
- Supports Simple Network Time Protocol (SNTP).
- Support Power Saving using the Link Status Mode.
- Support Time-based Power-over-Ethernet (PoE).
- Supports IEEE 802.3az compliance.
- Supports D-Link Discovery Protocol (DDP).
- Supports MIBs.

Note: The features are subject to change based on implementation plan without prior notice.

Front Panel Components

The front panel of the Switch features a variety of LED indicators, ports, a Reset button, and a Mode button (only of PoE supported switches).

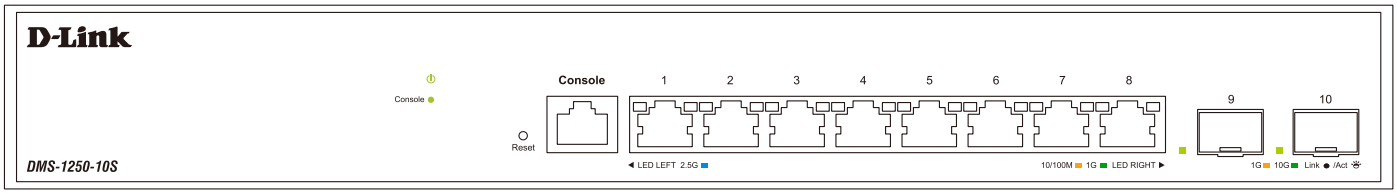

Figure 1-1 Front panel view of the DMS-1250-10S

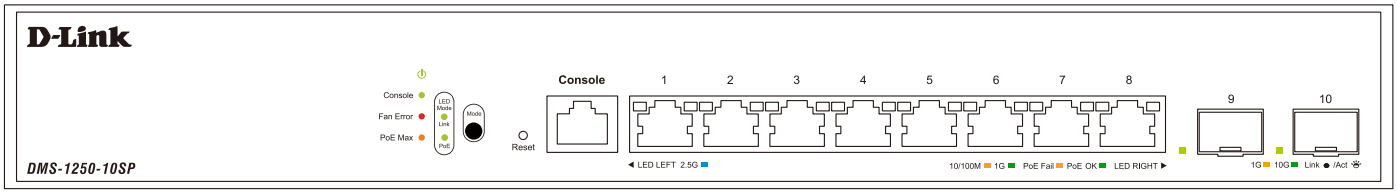

Figure 1-2 Front panel view of the DMS-1250-10SP

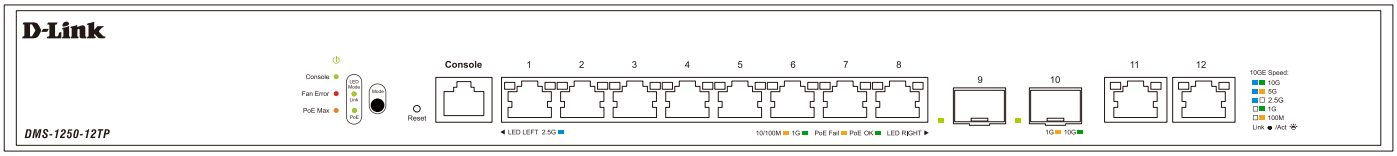

Figure 1-3 Front panel view of the DMS-1250-12TP

Ports

Ports that can be found on the front panel of this switch are listed in the table below.

Port	Description
Console	The RJ45 console port can be used to connect to the Command Line Interface (CLI) of the Switch for configuration, management, and monitoring.
100/1000/2.5GBASE-T RJ45 Ports	The DMS-1250 series Switches are equipped with 2.5GE RJ45 Ethernet ports. These ports can operate at 100Mbps, 1Gbps and 2.5Gbps wire-speeds.
100/1000/2.5GBASE-T RJ45 PoE Ports	The DMS-1250-10SP and DMS-1250-12TP Switches are equipped with 8 RJ45 PoE Ethernet ports. These ports can operate at 100 Mbps, 1 Gbps and 2.5 Gbps wire-speeds and support PoE function.
10 Gigabit SFP+ Ports	The Switch is equipped with SFP+ ports. These ports can operate at 1 Gbps and 10 Gbps wire-speeds and support a wide collection of SFP/SFP+ transceivers.
100/1000/2.5G/5G/10GBASE-T RJ45 Ports	The DMS-1250-12TP Switch supports 2 RJ45 10 Gbps Ethernet ports. These ports can operate at 100, 1000, 2500, 5000 and 10000 Mbps wire speeds.

CAUTION: This equipment is to be connected only to PoE networks without routing to the outside plant.

ATTENTION : Cet équipement ne doit être connecté qu'à des réseaux PoE sans routage vers l'extérieur.

For a complete list of SFP/SFP+ transceivers that are compatible with this switch, refer to the **SFP+ Ports** section in **Appendix A - Technical Specifications**.

Reset Button

On the front panel of the Switch is a **Reset** button. The Switch will reboot or reset to factory default settings depending on how long this button is pressed.

- Press and hold the **Reset** button for less than 5 seconds (release before 5 seconds) to reboot the Switch. All unsaved configurations will be lost.
- Press and hold the **Reset** button for more than 5 seconds (release between 6 and 10 seconds or above) to reset the software configuration of the Switch to the factory default settings. All the port LEDs will light up (solid amber) for 2 seconds to indicate the start of the factory reset procedure.

LED Indicators

Located on the front panel of this switch are LED indicators: Power, Console, Fan Error, and Link/Act indicators for all the ports.

Location	LED indicator	Color	Status	Description
Per Device	**Power**	Green	Light on (Solid)	Power on
		Green	Light blinking	Performing System Self-test
		Off	Light off	Power off
	Console	Green	Light on (Solid)	RJ45 console port is active
		Off	Light off	Console off
	Fan Error	Red	Light on (Solid)	Fan fail
		Off	Light off	Operating normally
	PWR Max. *DMS-1250-10SP* *DMS-1250-12TP*	Amber	Light on (Solid)	When the power supplied to attached PDs approaches the maximum PoE budget (within 7 Watts) and enters the Guard band mode.
			Light blinking	When available PoE power output becomes sufficient enough (more than 7 Watts) to connect one more PD, PoE MAX LED will blink 5 seconds, the PoE MAX LED will blink 5 seconds.
		Off	Light off	When no power is supplied to attached PDs or when no PDs are attached.
	Port LED Mode: *DMS-1250-10SP* *DMS-1250-12TP*	Green	Light on (Solid)	An LED Mode push button is allowed the user to select the port Link/ACT status or PoE status. • Link/Act/Speed Mode • PoE Mode
LED Per 10/100/1000/2500 Mbps Port	**Link/Act/Speed Mode**	Blue (Left)	Light on (Solid)	When there is a connection (or link) to a 2500Mbps Ethernet device on any of the ports
			Light blinking	When there is reception or transmission of data occurring at 2500Mbps
		Green (Right)	Light on (Solid)	When there is a connection (or link) to a 1000Mbps Ethernet device on any of the ports
			Light blinking	When there is reception or transmission of data occurring at 1000Mbps
		Amber (Right)	Light on (Solid)	When there is a connection (or link) to a 10/100Mbps Ethernet device on any of the ports
			Light blinking	When there is reception or transmission of data occurring at 10/100Mbps
		Off	Light off	Link down or no link
	PoE Mode *DMS-125010SP* *DMS-1250-12TP*	Green	Light on (Solid)	Power feeding
		Amber	Light on (Solid)	Error Condition
		Off	Light off	No Power feeding
LED per SFP/SFP+ Port	**Link/Act**	Green	Light on (Solid)	When there is a connection (or link) to a 10Gbps Ethernet device on any of the ports
			Light blinking	When there is reception or transmission of data occurring at a 10Gbps port

Location	LED indicator	Color	Status	Description
		Amber	Light on (Solid)	When there is a connection (or link) to a 1000Mbps Ethernet device on any of the ports
			Light blinking	When there is reception or transmission of data occurring at a 1000 Mbps port
		Off	Light off	Link down or no link

Port Functions

Feature	Description
Console Port	RJ45 interface for Out-Of-Band (OOB) CLI configuration
RJ45 Ports	Compliant with the following standards: • IEEE 802.3 compliance • IEEE 802.3u compliance • IEEE 802.3ab compliance • IEEE 802.3az compliance • IEEE 802.3bz compliance • IEEE 802.3an compliance
	Support Half-Duplex and Full-Duplex • IEEE 802.3x Flow Control support for Full-Duplex mode • Back Pressure for Half-Duplex mode • Head-of-line blocking prevention • Manual/auto MDI/MDIX configuration • Auto-Negotiation for each port
SFP/SFP+ Ports	Compliant with the following standards: • IEEE 802.3ae compliance • IEEE 802.3z compliance
	SFP Transceivers Supported: • DEM-310GT (1000BASE-LX, single-mode, 10 km, with DDM) • DEM-311GT (1000BASE-SX, multi-mode, 550 m) • DEM-312GT2 (1000BASE-SX, multi-mode, 2 km) • DEM-314GT (1000BASE-LHX, single-mode, 50 km) • DEM-315GT (1000BASE-ZX, single-mode, 80 km) • DGS-712 (1000BASE-T)
	WDM (BiDi) SFP Transceivers Supported: • DEM-330T (1000BASE-BX-D, single-mode, 10 km, TX: 1550 nm / RX: 1310 nm) • DEM-330R (1000BASE-BX-U, single-mode, 10 km, TX: 1310 nm / RX: 1550 nm) • DEM-331T (1000BASE-BX-D, single-mode, 40 km, TX: 1550 nm / RX: 1310 nm) • DEM-331R (1000BASE-BX-U, single-mode, 40 km, TX: 1310 nm / RX: 1550 nm)
	SFP+ Transceivers Supported: • DEM-431XT (10GBASE-SR,multi-mode, 80 km, without DDM) • DEM-432XT (10GBASE-LR, single-mode, 10 km, without DDM) • DEM-433XT (10GBASE-ER, single-mode, 40 km, without DDM) • DEM-434XT (10GBASE-ZR, single-mode, 80 km, without DDM) • DEM-435XT (10GBASE-LRM Multi-Mode, 200M SFP+ Transceiver) • DEM-410T (10GBASE-T Copper SFP+ transceiver, 30M)

Feature	Description
	WDM (BiDi) SFP+ Transceivers Supported: • DEM-436XT-BXD (10GBASE-LR, single-mode, 20 km, TX: 1330 nm / RX: 1270 nm, without DDM) • DEM-436XT-BXU (10GBASE-LR, single-mode, 20 km, TX: 1270 nm / RX: 1310 nm, without DDM)
	SFP+ Direct Attached Cables (DAC) Supported: • DEM-CB100S (10G SFP+, 1 m) • DEM-CB300S (10G SFP+, 3m)
PoE Ports *DMS-1250-10SP* *DMS-1250-12TP*	Supports the following: • IEEE 802.3af PoE and IEEE 802.3at PoE+ compliance • The auto-discovery feature automatically recognizes the connection of the PD device and immediately provides power • Automatically disable ports if the port current is over 400~450mA while other ports will remain active • Active circuit protection automatically disables the port if there is a short while other ports remain active • For 802.3af/at capable devices it will provide the power for the following classifications below:

Class	Usage	Max Power used by PD
0	Default	0.44 Watt to 12.95 Watt
1	Optional	0.44 Watt to 3.84 Watt
2	Optional	3.84 Watt to 6.49 Watt
3	Optional	6.49 Watt to 12.95 Watt
4	Optional (802.3at Only)	12.95 Watt to 25.5 Watt

• For 802.3af/at capable devices it will provide the power for the following classifications below:
• The total PoE power budget of the DMS-1250-10SP/12TP : 240 Watts.

Rear Panel Components

The rear panel of this switch features a security lock, a GND, an AC power connector, and a power cord retainer hole.

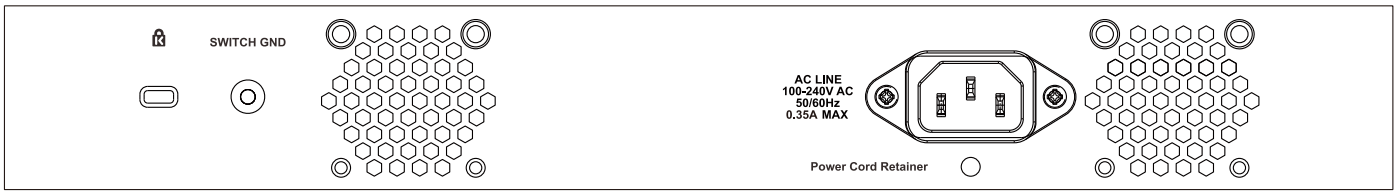

Figure 1-4 Rear panel view of the DMS-1250-10S

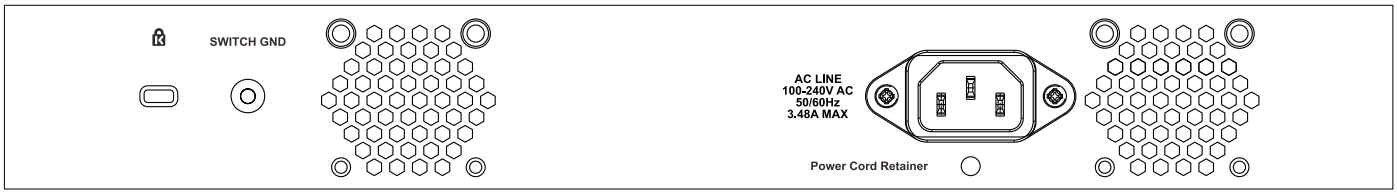

Figure 1-5 Rear panel view of the DMS-1250-10SP

Figure 1-6 Rear panel view of the DMS-1250-12TP

Components that can be found on the rear panel of this switch are listed in the table below.

Component	Description
Security Lock	Provide a Kensington-compatible security lock to be able to connect to a secure immovable device. Insert the lock into the notch and turn the key to secure the lock. The lock-and-cable apparatus should be purchased separately.
Switch GND	Use an electrical grounding wire and connect one end of the wire to the Switch GND and the other end of the wire to an electrical grounding point most commonly found on the Switch mounting rack itself.
AC Power Connector	The AC power cord with a three-pronged AC power connector can be plugged into this receptacle to supply the Switch with 100-240 VAC power at 50-60 Hz.
Power Cord Retainer	The power cord retainer is used to fix the AC power cord in place and not easily loose.

Side Panel Components

The side panels of this switch contain heat vents, fans, and rack-mounting screw holes. The heat vents are used to dissipate internal heat and facilitate internal air circulation. Do not block these openings. Leave at least 4 inches of space at the sides of the Switch for proper ventilation. Without proper heat dissipation and air circulation, system components might overheat which could lead to system failure or even severely damaged components.

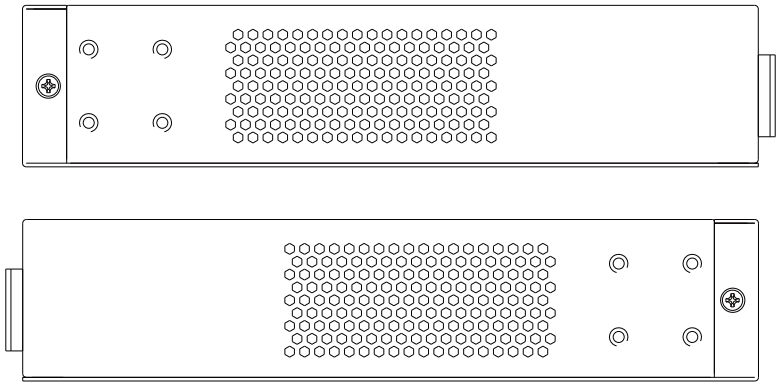

Figure 1-7 Side panels of the DMS-1250-10S

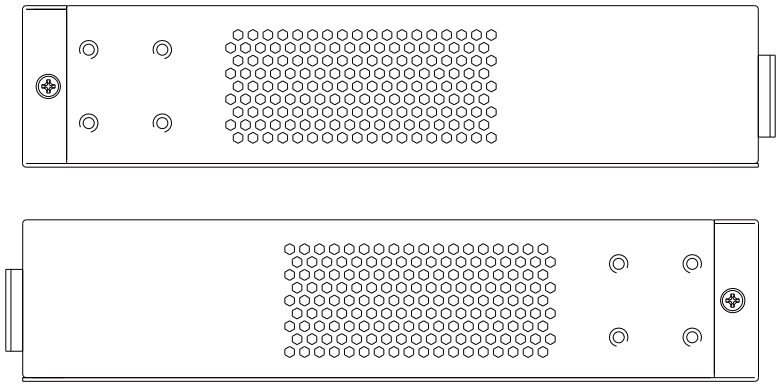

Figure 1-8 Side panels of the DMS-1250-10SP

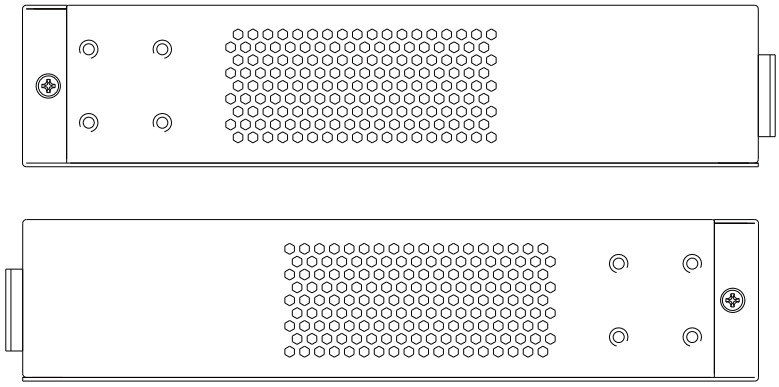

Figure 1-9 Side panels of the DMS-1250-12TP

Smart Fans

The DMS-1250 Series Switches includes **smart fans** that will automatically change their speed depending on the internal temperature detected by the sensors built-in the Switch's hardware.

The following will explain at what temperature the speed of the fan(s) will change:

- **DMS-1250-10S: FANLESS**
- **DMS-1250-10SP/DMS-1250-12TP:** 5-speed Smart FAN setting as below:
  - T1 -- 10°C, FAN Duty 30%
  - T2 -- 25°C, FAN Duty 40%
  - T3 -- 40°C, FAN Duty 60%
  - T4 -- 50°C, FAN Duty 70%

DMS-1250 also can configure the operation state of internal fans through Web UI or command line interface (CLI).

The switch fans can be manually set to Fan Off mode or Quiet mode if the ambient temperature or PoE load do not exceed the critical level. Please refer to User/CLI manual for more details.

2. Installation

Installation Guidelines
Installing the Switch without a Rack
Installing the Switch in a Standard 19" Rack
Installing Transceivers into the Transceiver Ports
Power On (AC Power)

Installation Guidelines

This section will discuss the hardware installation guidelines that the user must follow in order to properly and safely install this switch into the appropriate environment.

- Visually inspect the power cord and see that it is fully secured to both the power connector, on the Switch, and the electrical outlet that supplies power.
- Install the Switch in a fairly cool and dry place within the acceptable operating temperature and humidity ranges. For more information about the acceptable operating temperature and humidity ranges, refer to the Physical and Environmental section.
- Install the Switch in a site free from strong electromagnetic field generators such as motors, vibration, dust, and direct exposure to sunlight.

Installing the Switch without a Rack

This section is used to guide the user through installing the Switch in an area other than a switch rack. Attach the included rubber feet to the bottom of the Switch. Take note that there should be marked blocks on the bottom of the Switch to indicate where to attach the rubber feet. These markings are usually found in each corner on the bottom of the device. The rubber feet cushion the Switch, protecting the casing from scratches and preventing it from scratching other surfaces.

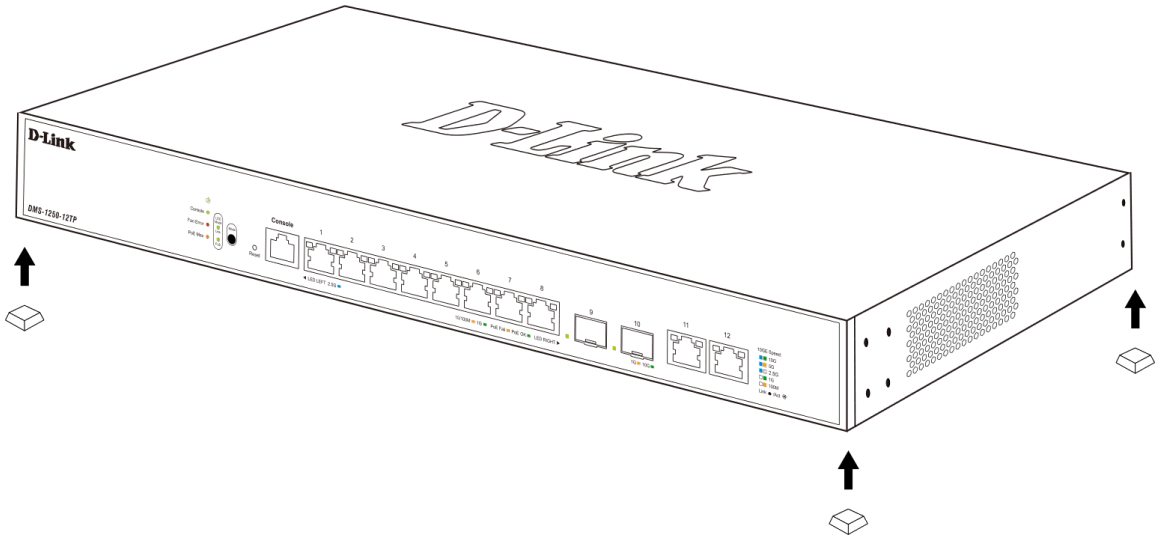

Figure 2-1 Attaching rubber feet to the Switch

Install the Switch on a sturdy, level surface that can support the weight of the Switch (see the **Weight** section in **Appendix A - Technical Specifications**.). Do not place any heavy objects on the Switch. The power outlet should be within 1.82 meters (6 feet) of the Switch. Make sure that there is proper heat dissipation from and adequate ventilation around the Switch. Leave at least 10 cm (4 inches) of space at the front, sides, and rear of the Switch for ventilation.

Installing the Switch in a Standard 19" Rack

This section is used to guide the user through installing the Switch into a switch rack. The Switch can be mounted in a standard 19"(1U) rack using the provided mounting brackets.

Fasten the mounting brackets to the sides of the Switch using the screws provided.

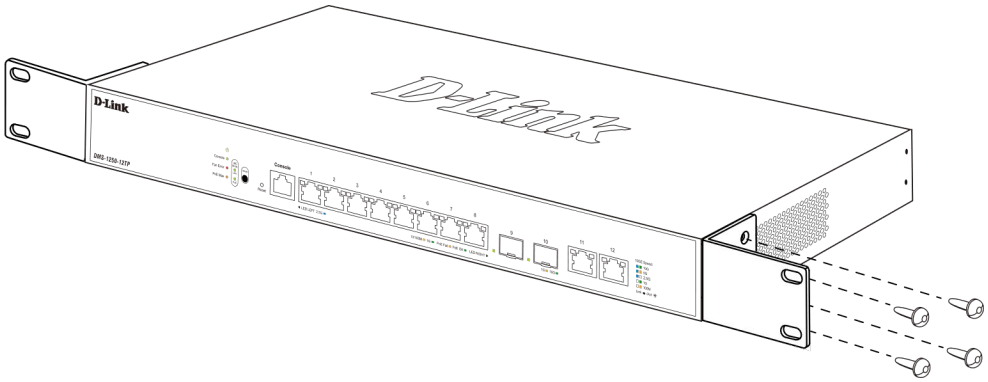

Figure 2-2 Attaching rack-mount brackets to the Switch

Fasten the mounting brackets in any available open space in the rack using the screws provided.

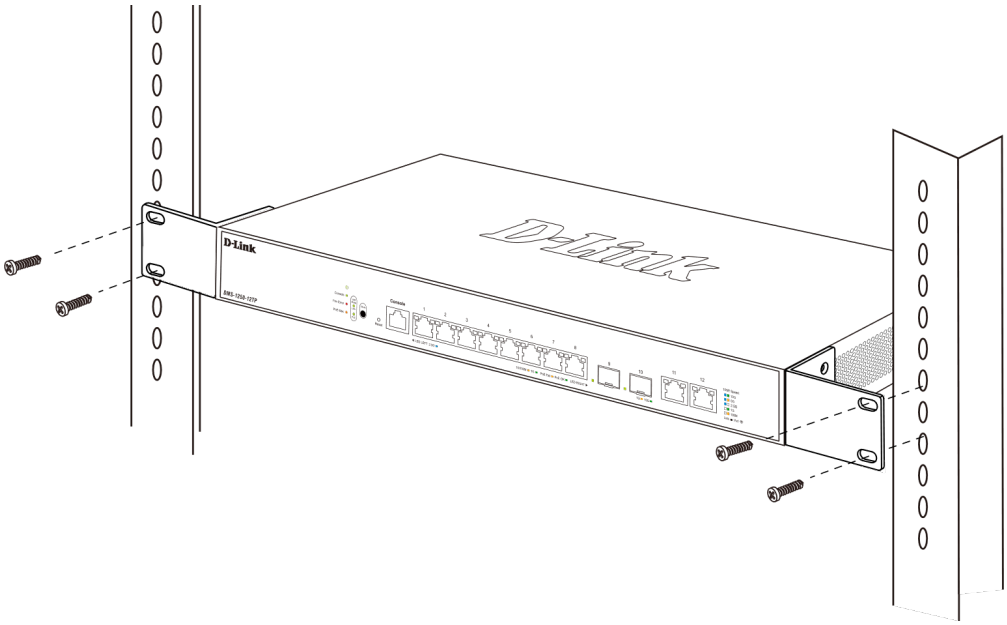

Figure 2-3 Installing the Switch in a Rack

Make sure that there is adequate space around the Switch to allow for proper airflow, ventilation, and cooling.

Installing Transceivers into the Transceiver Ports

The Switch is equipped with Small Form-factor Pluggable (SFP) and Enhanced Small Form-factor Pluggable (SFP+) ports that can be used to connect various other networking devices to this switch that do not support the standard RJ45 wiring connection. These ports are generally used to connect this switch to optical fiber connections and can be used to connect devices to the Switch over great distances. The maximum distance that the RJ45 wiring connection can reach is 100 meters. Fiber optic connections can span several kilometers.

The figure below illustrates how to properly insert SFP/SFP+ transceivers into the Switch's SFP/SFP+ ports.

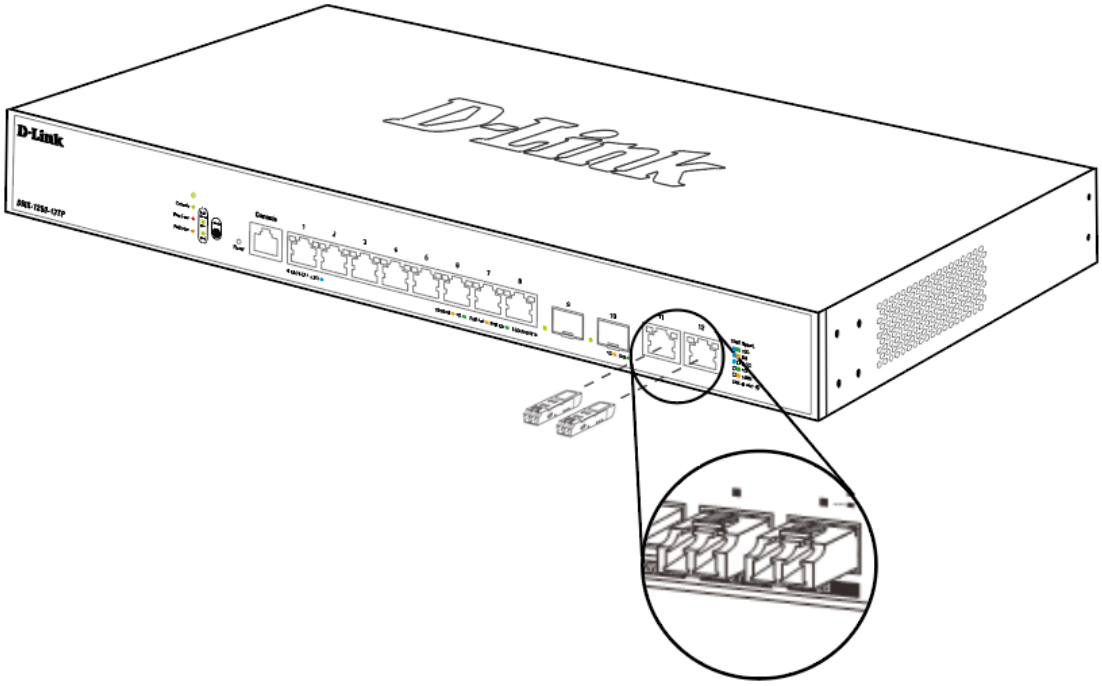

Figure 2-4 Inserting transceivers into the transceiver ports

The SFP/SFP+ ports also support other transceiver form factors like **SFP** and **SFP+** transceivers. A complete list of SFP/SFP+ transceivers, compatible with this switch, can be found in the **SFP+/SFP Ports** section in **Appendix A - Technical Specifications** at the end of this document.

NOTE: Only use pluggable optical modules and Direct-Attach Cables (DAC) that meet the following regulatory requirements:

- Class 1 Laser Product
- UL and/or CSA registered component for North America
- FCC 21 CFR Chapter 1, Sub-chapter J in accordance with FDA & CDRH requirements
- IEC/EN 60825-1/-2: 2007 2nd edition or later, European Standard

REMARQUE : N'utilisez que des modules optiques enfichables et des câbles à connexion directe (DAC) qui répondent aux exigences réglementaires suivantes :

- Produit laser de classe 1
- Composant enregistré UL et/ou CSA pour l'Amérique du Nord
- FCC 21 CFR Chapitre 1, Sous-chapitre J conformément aux exigences de la FDA et du CDRH
- CEI/EN 60825-1/-2: 2007 2nd édition ou ultérieure, norme européenne

Power On (AC Power)

Plug one end of the AC power cord into the power socket of the Switch and the other end into the local power source outlet. After the system is powered on, the LED will blink green to indicate that the system is booting up.

Power Failure (AC Power)

In the event of a power failure, just as a precaution, unplug the power cord from the Switch. After the power returns, plug the power cord back into the power socket of the Switch.

Installing Power Cord Retainer

To prevent accidental removal of the AC power cord, it is recommended to install the power cord retainer together with the power cord.

With the rough side facing down, insert the tie wrap into the hole below the power socket.

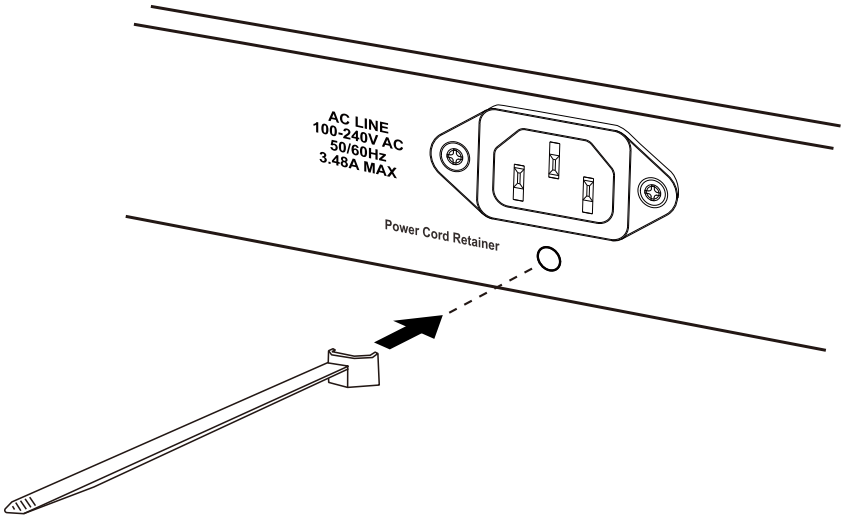

Figure 2-5 Insert Tie Wrap into the Switch

Plug the AC power cord into the power socket of the Switch.

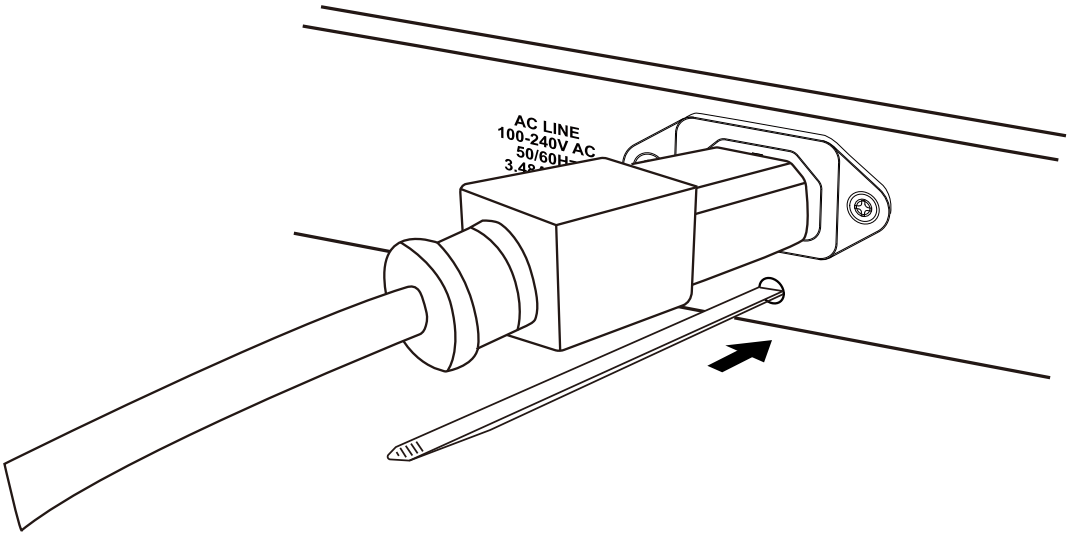

Figure 2-6 Connect the power cord to the Switch

Slide the retainer through the tie wrap until the end of the cord.

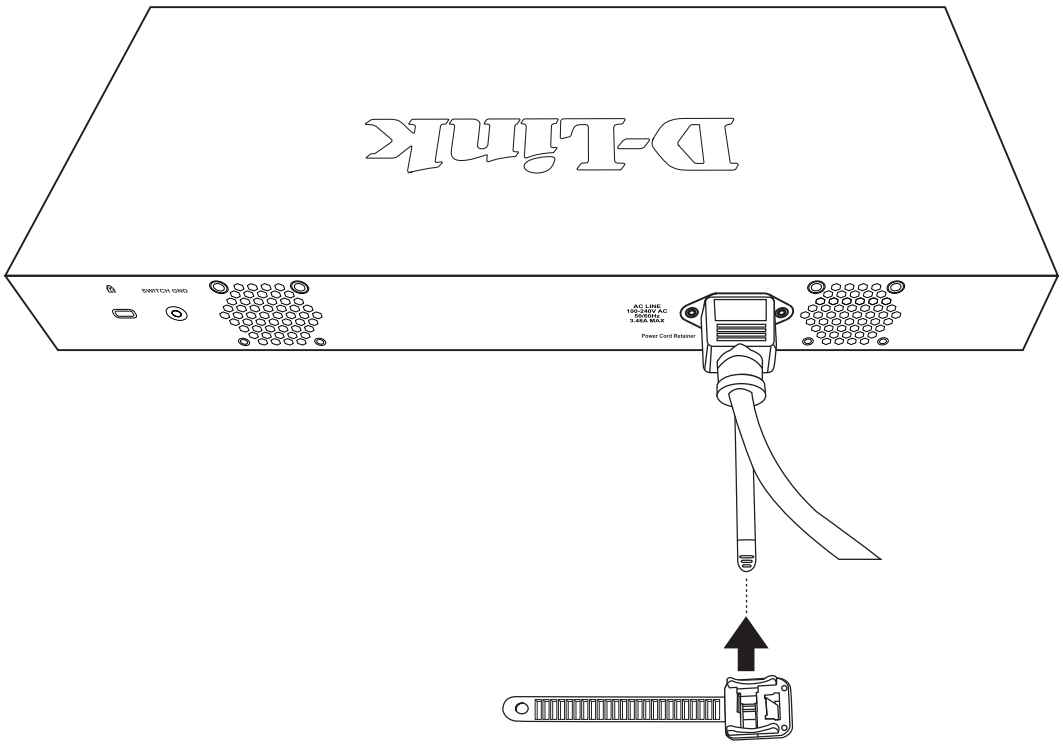

Figure 2-7 Slide the Retainer through the Tie Wrap

Circle the tie of the retainer around the power cord and into the locker of the retainer.

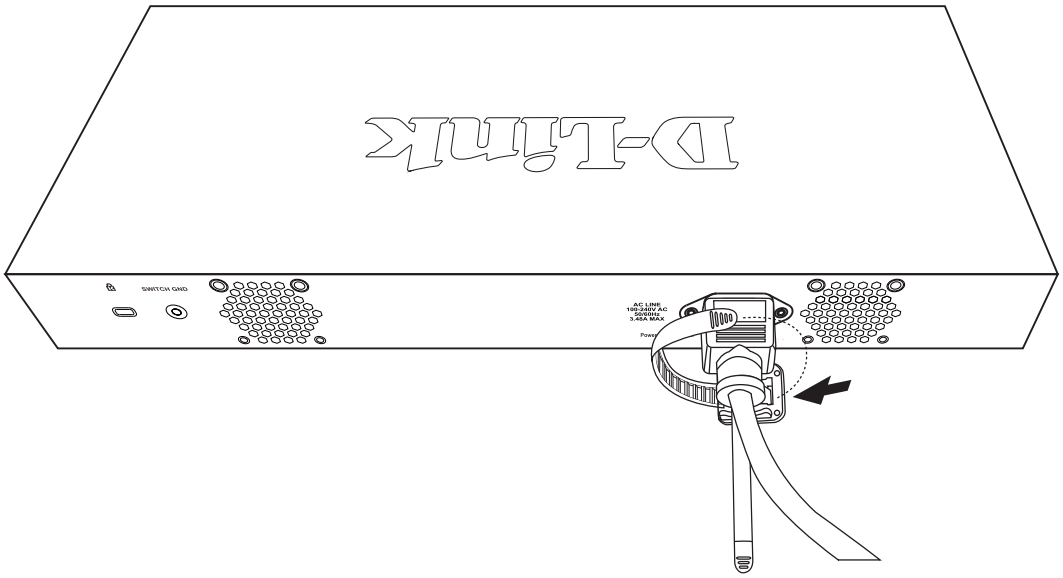

Figure 2-8 Circle around the power cord

Fasten the tie of the retainer until the power cord is secured.

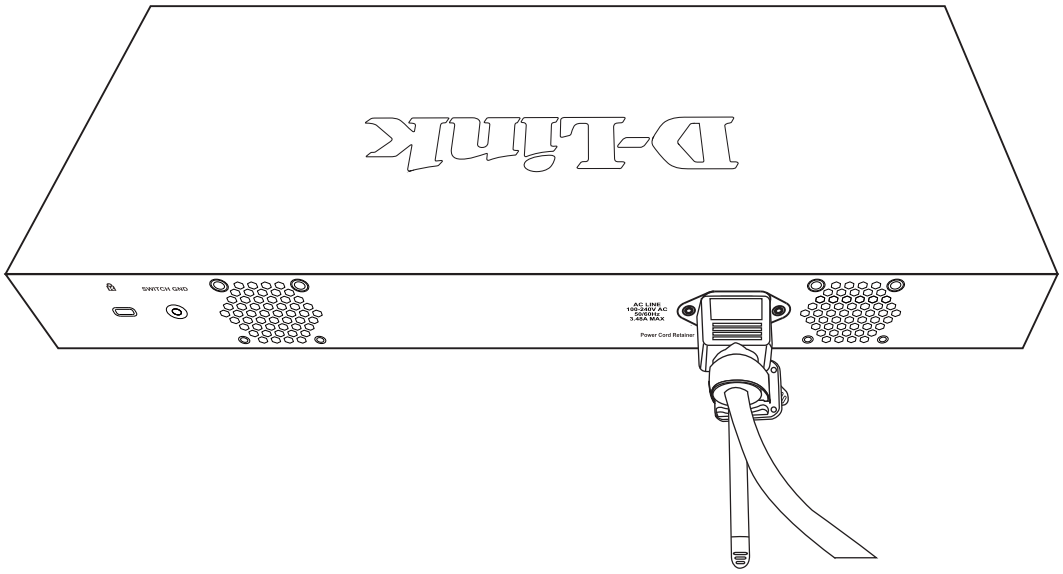

Figure 2-9 Secure the power cord

*All the product pictures shown are for illustration purposes only. Actual product appearance may differ from that depicted on the packaging/documentation

3. Switch Connections

Switch to an End Node
Switch to Another Switch
Switch to a Server

Switch to an End Node

An end node is a generic name for edge networking devices that will be connected to this switch. Typical examples of end nodes are Personal Computers (PCs), Notebooks, Access Points, Print Servers, VoIP Phones and more. Each end node should be fitted with a RJ45 networking port. Normally, end nodes will connect to this switch by using a standard twisted-pair UTP/STP network cable. When a successful connection is established, the corresponding port light will illuminate and blink to indicate that network activity is taking place on that port.

The diagram below displays a typical end node connected to the Switch.

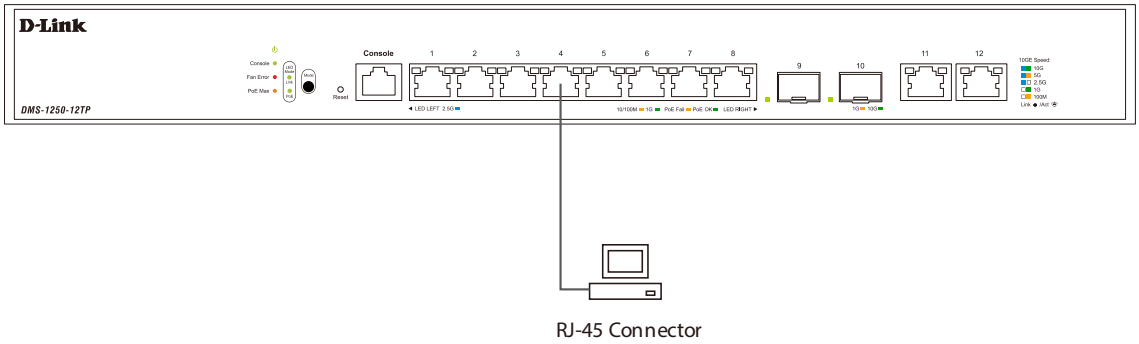

Figure 3-1 Connecting the Switch to an End Node

Switch to Another Switch

The Switch can be used to connect to any other switch or hub in the network. This network topology is used when the Switch does not have enough ports to cater for all the end nodes in the network.

There is a great deal of flexibility on how connections are made using the appropriate cabling.

- Connect a 10BASE-T switch port to the Switch using a twisted-pair Category 3, 4, or 5 UTP/STP cable.
- Connect a 100BASE-TX switch port to the Switch via a twisted-pair Category 5 UTP/STP cable.
- Connect a 1000BASE-T switch port to the Switch via a twisted pair Category 5e UTP/STP cable.
- Connect a switch supporting an optical fiber uplink to the Switch's SFP/SFP+ ports via fiber optical cabling.
- Connect a 10GBASE-T switch port to the Switch via twisted pair Category 6a UTP/STP cable[1].

[1]10GBASE-T ports may be limited to support 10/100Mbps half mode connection.

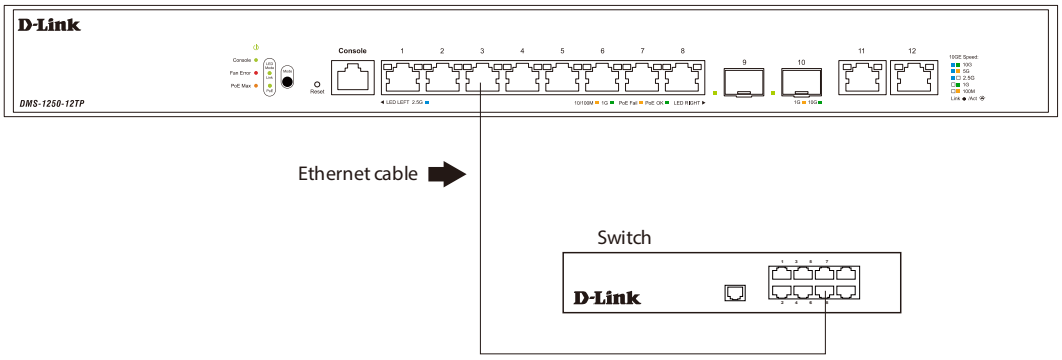

Figure 3-2 Connecting the Switch to another switch

Switch to a Server

The Switch is ideal for connecting to a network backbone, server, or server farm. The RJ45 ports (Port 11-12) operate at a speed of 100Mbps/1G/2.5G/5G/10G. The SFP+ ports operate at a speed of 1/10 Gbps.

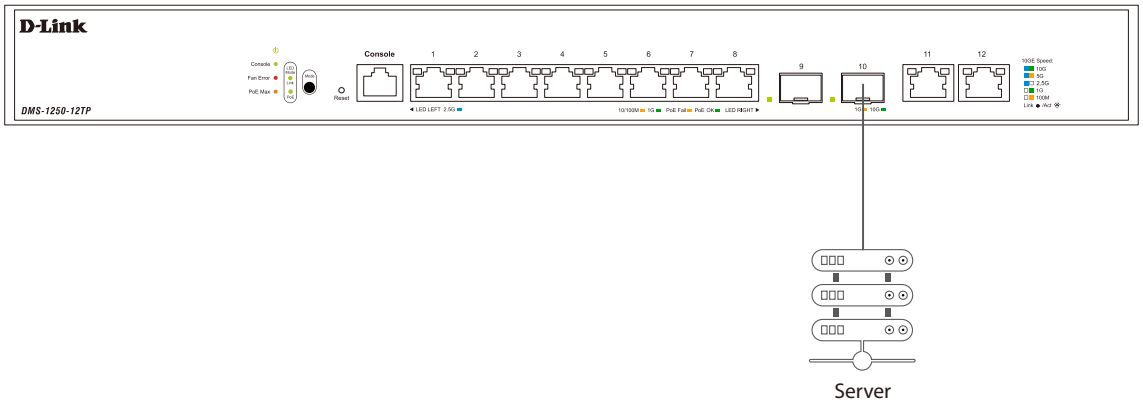

Figure 3-3 Connecting the Switch to a server

4. Switch Management

Management Options
Connecting to the Console Port
Connecting using SNMP

Management Options

This switch provides multiple access platforms that can be used to configure, manage, and monitor networking features available on this switch. Currently there are three management platforms available, which are described below.

Command Line Interface (CLI)

This switch can be managed, out-of-band, by using the console port on the front panel of the Switch. Alternatively, the Switch can also be managed, in-band, by using a Telnet connection to any of the LAN ports on the Switch. The command line interface provides the access to some of switch management features.

For more information about the CLI, refer to the *DMS-1250 Series CLI Reference Guide*.

SNMP-based Management

The Switch can be managed with an SNMP-compatible console program. The Switch supports SNMP v1, SNMPv2c and SNMPv3. The SNMP agent decodes the incoming SNMP messages and responds to requests with MIB objects stored in the database. The SNMP agent updates the MIB objects to generate statistics and counters.

Web User Interface (Web UI)

The Web UI can be accessed from any computer running web browsing software from its LAN port when it is connected to any of the RJ45 or SFP/SFP+ ports. The Web UI on the Switch can also be accessed using an HTTPS (SSL) connection.

This management interface is a more graphical representation of the features that can be viewed and configured on this Switch. Most of the features available through the CLI can be accessed through the Web UI. Web browsers like Microsoft's Internet Explorer, Mozilla Firefox, Google Chrome, or Safari can be used.

For more information about the Web UI, refer to the *DMS-1250 Series Web UI Reference Guide*.

Connecting to the Console Port

The front panel of the Switch provides an RJ45 console port to connect a remote system for monitoring and configuring the Switch.

To use the console port, the following equipment is needed:

- A terminal or a computer with both RJ45 ethernet port and terminal emulation software.
- A RJ45 Ethernet cable.

To connect the RJ45 console port on the Switch to the computer:

- Connect the Ethernet cable to the RJ45 port on the computer running terminal emulation software then insert the RJ45 connector into the RJ45 console port on the front of the Switch.

To configure the terminal emulation software as follows:

- Select the appropriate serial port (COM1 or COM2).
- Set the data rate to 115200 baud.
- Set the data format to 8 data bits, 1 stop bit, and no parity.

- Set flow control to none.

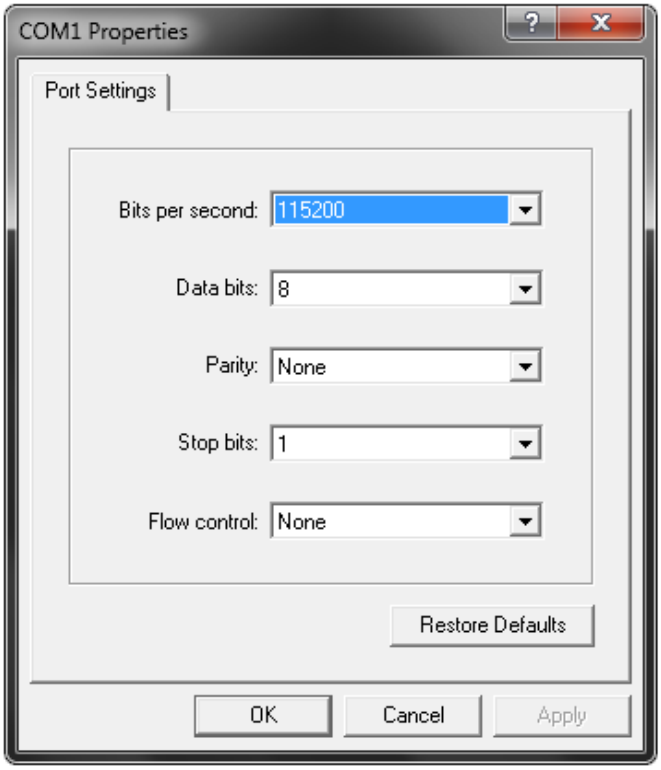

Figure 4-1 COM Port Configuration

To be able to view the boot procedure, the Switch needs to be rebooted. The simplest way, at this stage, to reboot the Switch is to unplug and re-insert the power cable from and into the power receptacle on the back of the Switch.

After correctly configuring the terminal settings and re-inserting the power cable, the boot procedure will appear in the terminal.

```
Boot Procedure                                          1.00.001
-----------------------------------------------------------------
WINBOND/
Power on self test..................................... 100 %


Loading Runtime Image.................................. 100 %
Uncompressing Kernel Image ............................ 100 %

Starting kernel ...


Device Discovery ...................................... 100 %

MAC Address : 00-12-99-00-77-98
H/W Version : A1
F/W Version : V1.00.002.T01


Switch con0 is now available
```

After the boot sequence has been completed, the console login screen will be displayed.

Connecting to the Switch for the First Time

The Switch supports user-based security that can prevent unauthorized users from accessing the Switch or changing its configuration. This section will explain how to log into the Switch's Command Line Interface via the out-of-band console connection.

Both the default **Username** and **Password** is *admin*. Enter the username and password when prompt to do so and press enter after each entry. The CLI prompt will immediately be available, as shown below.

```
DMS-1250-10SP Multi-Gigabit Ethernet PoE Smart Managed Switches

Command Line Interface
Firmware: Build V1.00.002.T01
Copyright(C) 2022 D-Link Corporation. All rights reserved.

User Access Verification

Username: admin
Password: *****
Switch#
```

NOTE: For security reasons, it is highly recommended to configure a personal username and password for this Switch.

Creating a User Account

One of the first and most important tasks will be to create user accounts. Logging in using a predefined administrator-level username will give the user privileged access to the Switch's management software. Also this will prevent unauthorized access to the Switch and record the passwords for future reference.

An example to create an administrator-level account for the Switch call ‘NewUser’:

```
Switch#configure terminal
Switch(config)#username NewUser password 12345
Switch(config)#
```

In the example above:

- Enter the ***configure terminal*** command to enter the **Global Configuration Mode**. Press ENTER.
- Enter the ***username NewUser password 12345*** command to create a user account with the username of *NewUser* and a password of *12345*. Press ENTER.

NOTE: Passwords are case sensitive. Usernames can be up to 32 characters in length. Passwords can be up to 32 plain-text characters in length.

Configuring the IP Address

Each switch must be assigned its own in-band IP Address, which is used for communication with an SNMP network manager or other TCP/IP applications. The Switch's default IP address is 10.90.90.90 with a subnet mask of 255.0.0.0.You can change the IP address of the Switch to meet the specification of your networking address scheme.

The IP address of the Switch must be configured before it can be managed, by the user, via the Web UI.

An example to change the IP address of the Switch to ‘10.50.50.50’, using a subnet mask of ‘255.0.0.0’:

```
Switch#configure terminal
Switch(config)#interface vlan 1
Switch(config-if)#ip address 10.50.50.50 255.0.0.0
Switch(config-if)#
```

In the above example,

- Enter the ***configure terminal*** command to enter the **Global Configuration Mode**. Press ENTER.
- Enter the ***interface vlan 1*** command to enter the **VLAN Configuration Mode** of the default VLAN 1.
- Enter the ***ip address 10.50.50.50 255.0.0.0*** command to change the IP address of the Switch to *10.50.50.50* and the subnet mask to *255.0.0.0*.

The Switch can now be accessed and configured through Telnet or the Web UI. The Switch's IP address can also automatically be obtained by using the DHCP protocol.

Connecting using SNMP

The Simple Network Management Protocol (SNMP) is an OSI Layer 7 (Application Layer) protocol designed specifically for managing and monitoring network devices. SNMP enables network management stations to read and modify the settings of gateways, routers, switches, and other network devices. Use SNMP to configure system features for proper operation, monitor performance, and detect potential problems in the Switch, switch group, or network.

Managed devices that support SNMP include software (referred to as an agent), which runs locally on the device. A defined set of variables (managed objects) is maintained by the SNMP agent and used to manage the device. These objects are defined in a Management Information Base (MIB), which provides a standard presentation of the information controlled by the on-board SNMP agent. SNMP defines both the format of the MIB specifications and the protocol used to access this information over the network.

The Switch supports SNMPv1, SMNPv2c, and SNMPv3. The administrator may specify which SNMP version to use to monitor and control the Switch. The three SNMP versions vary in the level of security provided between the management station and the network device.

In SNMPv1 and SNMPv2c, user authentication is accomplished using 'community strings', which function like passwords. The remote user SNMP application and the Switch SNMP must use the same community string. SNMP packets from any station that has not been authenticated are ignored (dropped).

The default community strings for the Switch used for SNMPv1 and SNMPv2c management access are:

- **public** - Allows authorized management stations to retrieve MIB objects.
- **private** - Allows authorized management stations to retrieve and modify MIB objects.

SNMPv3 uses a more sophisticated authentication process that is separated into two parts. The first part is to maintain a list of users and their attributes that are allowed to act as SNMP managers. The second part describes what each user on that list can do as an SNMP manager.

The Switch allows groups of users to be listed and configured with a shared set of privileges. The SNMP version may also be set for a listed group of SNMP managers. Thus, a group of SNMP managers can be created to view read-only information or receive traps using SNMPv1 while assigning a higher level of security to another group, granting read/write privileges using SNMPv3.

Using SNMPv3 individual users or groups of SNMP managers can be allowed to perform or be restricted from performing specific SNMP management functions. The functions that have been allowed or restricted are defined using the Object Identifier (OID) associated with a specific MIB. An additional layer of security is available for SNMPv3 in that SNMP messages may be encrypted.

Traps

Traps are messages that are sent by an SNMP-enabled device to the NMS, and can be used to alert network personnel of events that occur on the Switch. The events can be as serious as a reboot (someone accidentally turned off the Switch), or less serious like a port status change. The Switch generates traps and sends them to a pre-configured IP address, usually an NMS. Typical traps include trap messages for Authentication Failure and Topology Change.

Management Information Base (MIB)

A Management Information Base (MIB) stores management and counter information. The Switch uses the standard MIB-II Management Information Base module. Consequently, values for MIB objects can be retrieved from any SNMP-based network management software. In addition to the standard MIB-II, the Switch also supports its own proprietary enterprise MIB as an extended Management Information Base. The proprietary MIB may also be retrieved by specifying the MIB Object Identifier. MIB values can be either read-only or read-write.

5. Web-based Switch Configuration

Introduction
Logging into the Web UI
Web User Interface (Web UI)

Introduction

Most software functions of the Switch can be managed, configured, and monitored via the embedded HTML Web UI. Management can be done on the Switch from remote stations anywhere on the network through a standard web browser. The web browser acts as a universal access tool and can communicate directly with the Switch using the HTTP or HTTPS (SSL) protocol.

The following web browsers are supported:

- Internet Explorer (version 8,9,10,11)
- Firefox
- Google Chrome
- Safari
- Microsoft Edge

NOTE: The default IP address of this switch is ***10.90.90.90***, with a subnet mask of ***255.0.0.0***.

NOTE: The default username is admin and the default password is ***admin***.

Logging into the Web UI

To access the Web UI, open a standard web browser, enter the Switch's IP address into the address bar of the browser, and press the ENTER key.

5-1 IP address in Internet Explorer

After pressing the ENTER key, the following authentication window should appear, as shown below.

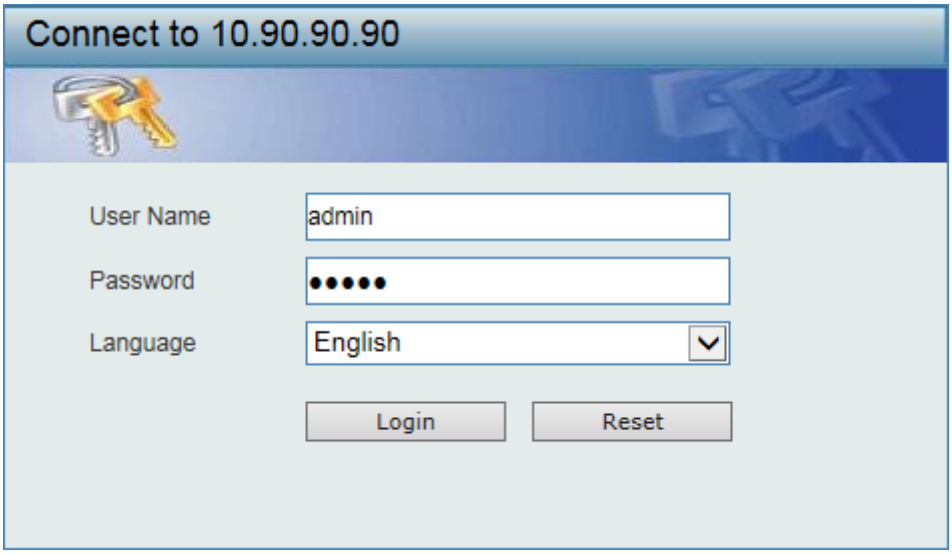

Figure 5-2 Web UI Login Window

Enter the **User Name** and **Password** in the corresponding fields and click Login. This will open the Web UI. Management features available in the Web UI of the Switch are explained below.

Web User Interface (Web UI)

The Web UI provides access to various Switch configuration and management windows. It allows the user to view performance statistics, and permits graphical monitoring of the system's status.

Areas of the Web UI

After logging into the Switch's Web UI, the following page will be displayed. The Web UI can be divided into four distinct areas that are described in more detail in the table below.

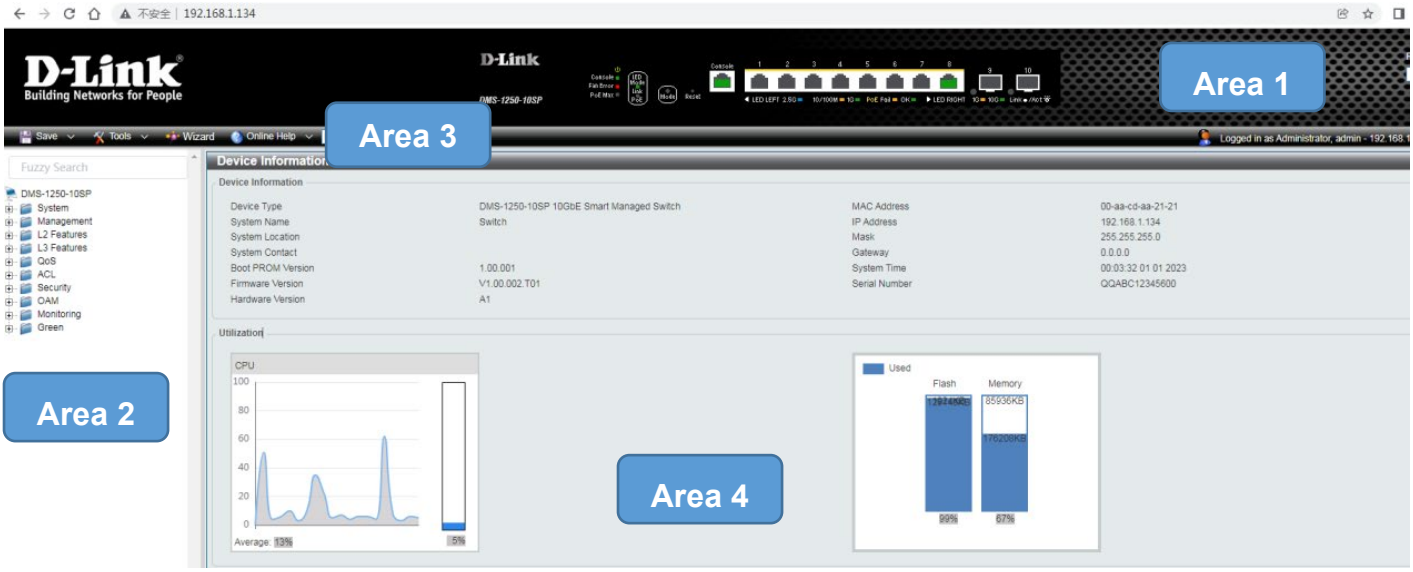

Figure 5-3 Main Web UI Window

Four main areas are displayed in the window.

Area Number	Function
AREA 1	This area displays a graphical, near real-time image of the front panel of the Switch. This area displays the Switch's ports and expansion modules. It also shows port activity based on a specific mode. Some management functions, including port monitoring, are accessible from here. Click the D-Link logo to go to the D-Link website.
AREA 2	This area displays a file explorer-type menu tree with all configurable options. Select the folder or window to display. Open folders and click the hyperlinked window buttons and subfolders contained within them to display information pertaining to that category.
AREA 3	This area displays a toolbar used to access **Save** and **Tools** menus.
AREA 4	This area displays graphical, real-time monitoring gauges of **Device Information**, **CPU Usage**, and **Memory Usage**.

Web Pages

In Area 2, mentioned above, the following main folders will be available for selecting.

Folder Name	Description
System	Features regarding the Switch's configuration can be viewed and configured in this folder.
Management	Features regarding the Switch's management can be viewed and configured in this folder.
L2 Features	Features regarding the Layer 2 functionality of the Switch can be viewed and configured in this folder.
L3 Features	Features regarding the Layer 3 functionality of the Switch can be viewed and configured in this folder.
QoS	Features regarding the Quality of Service functionality of the Switch can be viewed and configured in this folder.
ACL	Features regarding the Access Control List functionality of the Switch can be viewed and configured in this folder.
Security	Features regarding the Switch's security can be viewed and configured in this folder.
OAM	Features regarding the Switch's Operations, Administration, and Maintenance (OAM) can be viewed and configured in this folder.
Monitoring	The Switch's configuration and statistics can be viewed and configured in this folder.
Green	Features regarding the D-Link Green Technology can be viewed and configured in this folder.

Appendix A - Technical Specifications

General
Physical and Environmental
Performance
LED Indicators
Port Functions

General

Feature	Description		
Data Transfer Rates		**Half-duplex**	**Full-duplex**
	Ethernet	10 Mbps	20 Mbps
	Fast Ethernet	100 Mbps	200 Mbps
	Multi-G Ethernet	-	2 Gbps
	10 Multi-G Ethernet	-	20 Gbps
Network Cables	UTP/STP Category 3, 4, 5 for 10BASE-T UTP/STP Category.5, 5e for 100BASE-TX UTP/STP Category 5e for 1000/2.5G/5GBASE-T UTP/STP Category 6a for 10GBASE-T		

Physical and Environmental

Feature	Description
Internal AC Power Supply	**DMS-1250-10S**:100~240VAC, 50~60Hz, 0.35A **DMS-1250-10SP**: 100~240VAC, 50~60Hz, 3.48A **DMS-1250-12TP**: 100~240VAC, 50~60Hz, 3.51A
Security Lock	Provides a Kensington-compatible security lock, on the rear panel of the Switch, to be able to connect to a secure immovable device. Insert the lock into the notch and turn the key to secure the lock. The lock-and-cable apparatus should be purchased separately
Fans	The IC Sensor detects the temperature on the switch automatically and adjusts the speed. **DMS-1250-10S**: Fanless **DMS-1250-10SP**: 2 fans **DMS-1250-12TP**: 2 fans
Power Consumption	**Maximum Power Consumption:** **DMS-1250-10S: 13.522** Watts **DMS-1250-10SP: 21.221** Watts (W/O PoE**), 287.58** Watts (With PoE) **DMS-1250-12TP: 28.33** Watts (W/O PoE)**, 289.74** Watts (With PoE)
	Standby Power Consumption: **DMS-1250-10S: 5.443** Watts **DMS-1250-10SP: 10.936** Watts **DMS-1250-12TP: 14.020** Watts
Temperature	**Operating:** -5 °C to 50 °C (23 °F to 122 °F) **Storage:** -20 °C to 70 °C (-4 °F to 158 °F)
Humidity	**Operating:** 0 % to 95 % RH (non-condensing) **Storage:** 0 % to 95 % RH (non-condensing)

Feature	Description
Heat Dissipation	**DMS-1250-10S:46.33 BTU/hr** **DMS-1250-10SP:981.223 BTU/hr** **DMS-1250-12TP: 988.63 BTU/hr**
Dimensions	**DMS-1250-12T**: 440x210x44mm **DMS-1250-10S/10SP**: 330x200x44mm
Weight	**DMS-1250-10S:** 1.877 kg (4.14 lbs) **DMS-1250-10SP:** 2.377 kg (5.24 lbs) **DMS-1250-12TP:** 3.24 kg (7.14 lbs)
EMC Certifications	CE Class A, FCC Class A, ISED Class A, VCCI Class A, RCM Class A, BSMI Class A
Safety Certifications	IEC60950-1, IEC62368-1, UL/CSA62368-1, BSMI Class A

Performance

Feature	Description
Transmission Method	Store-and-forward
Packet Buffer	12 Mbits per device
Jumbo Frame Size	12KB
Switching Capacity	**DMS-1250-10S**: 80Gbps **DMS-1250-1SP**: 80Gbps **DMS-1250-12TP**: 120Gbps
Maximum Packet Forwarding Rate	**DMS-1250-10S**: 59.53Mpps **DMS-1250-10SP**:59.53Mpps **DMS-1250-12TP**:89.29Mbps
Priority Queues	8 Priority Queues per port.
MAC Address Table	**DMS-1250-10S**: 16K **DMS-1250-10SP**: 16K **DMS-1250-12TP**: 16K Supports 256 Static MAC addresses

Safety/Sécurité

Safety Instructions
Consignes de sécurité
General Precautions for Rack-Mountable Products
Protecting Against Electrostatic Discharge

Safety Instructions

Please pay careful attention to the following safety guidelines to ensure your own personal safety and to help protect your system from potential damage.

Safety Cautions

To greatly reduce the risk of physical injury, electrical shock, fire, and damage to equipment, observe the following precautions.

Observe and follow service markings.

- Do not attempt to service any product, except when it is explained in the system's documentation.
- Opening or removing covers, marked with a high voltage sign, may expose the user to electrical shock.
- Only a trained service technician should service components inside these compartments.

If any of the following conditions occur, unplug the product from the electrical outlet and replace the part or contact your trained service provider:

- Damage to the power cable, extension cable, or plug.
- An object has fallen into the product.
- The product has been exposed to water.
- The product has been dropped or damaged.
- The product does not operate correctly when the operating instructions are correctly followed.

General safety cautions:

- Electrical Hazard: Only qualified personnel should perform installation procedures.
- Before servicing, disconnect all power cords to remove power from the device.
- Keep the system away from radiators and heat sources. Also, do not block cooling vents.
- Do not spill food or liquids on system components, and never operate the product in a wet environment. If the system gets wet, contact your trained service provider.
- Do not push any objects into the openings of the system. Doing so can cause fire or electric shock by shorting out interior components.
- Only use this product with approved equipment.
- Allow the product to cool before removing the cover or touching internal components.
- Operate the product only from the type of external power source indicated on the electrical ratings label. If unsure of the type of power source required, consult your service provider or local power company.
- Be sure that attached devices are electrically rated to operate with the power available in your location.
- Use only approved power cable(s). If you have not been provided with a power cable for your system or for any AC-powered option intended for your system, purchase a power cable that is approved for use in your country. The power cable must be rated for the product and for the voltage and current marked on the product's electrical ratings label. The voltage and current rating of the cable should be greater than the ratings marked on the product.
- To help prevent electric shock, plug the system and peripheral power cables into properly grounded electrical outlets. These cables are equipped with three-prong plugs to help ensure proper grounding. Do not use adapter plugs or remove the grounding prong from a cable. If using an extension cable is necessary, use a 3-wire cable with properly grounded plugs.

- Observe the extension cable and power strip ratings. Make sure that the total ampere rating of all products plugged into the extension cable or power strip does not exceed 80 percent of the ampere ratings limit for the extension cable or power strip.
- To help protect the system from sudden, transient increases and decreases in electrical power, use a surge suppressor, line conditioner, or uninterruptible power supply (UPS).
- Position system cables and power cables carefully. Route cables so that they cannot be stepped on or tripped over. Be sure that nothing rests on any cables.
- Do not modify power cables or plugs. Consult a licensed electrician or your power company for site modifications. Always follow your local or national wiring rules.

When connecting or disconnecting power to and from hot-pluggable power supplies, observe the following guidelines:

- Install the power supply before connecting the power cable to the power supply.
- Unplug the power cable before removing the power supply.
- If the system has multiple sources of power, disconnect power from the system by unplugging all power cables from the power supplies.
- Move products with care and ensure that all casters and stabilizers are firmly connected to the system. Avoid sudden stops and uneven surfaces.

To help avoid damage to the system, be sure that the voltage selection switch, on the power supply, is set to match the power available at the Switch’s location:

- 115V/60Hz is used mostly in North and South America as well as Far Eastern countries like as South Korea and Taiwan
- 100V/50Hz is used mostly in Eastern Japan and 100V/60Hz in Western Japan
- 230V/50Hz is used mostly in Europe, the Middle East, Africa and the Far East

Consignes de sécurité

Veuillez prêter une attention particulière aux consignes de sécurité suivantes pour assurer votre sécurité personnelle et protéger votre système des dommages potentiels.

Précautions de sécurité

Pour réduire considérablement les risques de blessure physique, de choc électrique, d'incendie et de détérioration du matériel, observez les précautions suivantes.

Observez et respectez les marquages relatifs à l'entretien et/ou aux réparations.

- N'essayez pas de réparer un produit, sauf si cela est expliqué dans la documentation du système.
- L'ouverture ou le retrait des capots, signalés par un symbole de haute tension, peut exposer l'utilisateur à un choc électrique.
- Seul un technicien de maintenance qualifié est habilité à réparer les composants à l'intérieur de ces compartiments.

Si l'un des cas suivants se produit, débranchez l'appareil du secteur et remplacez la pièce concernée ou contactez votre prestataire de services agréé.

- Endommagement du câble d'alimentation, du câble de rallonge ou de la fiche.
- Un objet est tombé dans le produit.
- Le produit a été exposé à l'eau.
- Le produit est tombé ou a été endommagé.
- Le produit ne fonctionne pas correctement lorsque les instructions d'utilisation sont correctement suivies.

Précautions générales de sécurité:

- Danger électrique: Seul le personnel qualifié doit effectuer les procédures d'installation.
- Avant de procéder à l'entretien, débranchez tous les cordons d'alimentation pour mettre le périphérique hors tension.

- Eloignez le système des radiateurs et des sources de chaleur. Par ailleurs, n'obturez pas les fentes d'aération.
- Ne versez pas de liquide sur les composants du système et n'introduisez pas de nourriture à l'intérieur. Ne faites jamais fonctionner l'appareil dans un environnement humide. Si le système est mouillé, contactez votre prestataire de services qualifié.
- N'insérez aucun objet dans les fentes de l'appareil. Vous risqueriez de provoquer un incendie ou un choc électrique en court-circuitant les composants internes.
- Utilisez ce produit uniquement avec un équipement approuvé.
- Laissez l'appareil refroidir avant de déposer le capot ou de toucher les composants internes.
- Faites fonctionner le produit uniquement avec la source d'alimentation indiquée sur l'étiquette signalétique où figurent les caractéristiques électriques nominales. Si vous ne savez pas avec certitude quel type de source d'alimentation est requis, consultez votre prestataire de services ou votre compagnie d'électricité.
- Assurez-vous que les caractéristiques nominales des appareils branchés correspondant à la tension du réseau électrique.
- Utilisez uniquement des câbles d'alimentation homologués. Si un câble d'alimentation n'est pas fourni pour le système ou pour un composant/accessoire alimenté par CA destiné au système, procurez-vous un câble d'alimentation homologué pour une utilisation dans votre pays. Le câble d'alimentation doit être adapté à l'appareil et ses caractéristiques nominales doivent correspondre à celles figurant sur l'étiquette du produit. La tension et le courant nominaux du câble doivent être supérieurs aux valeurs nominales indiquées sur l'appareil.
- Pour éviter tout risque de choc électrique, branchez les câbles d'alimentation du système et des périphériques à des prises électriques correctement mises à la masse. Ces câbles sont équipés de fiches à trois broches pour garantir une mise à la masse appropriée. N'utilisez pas d'adaptateur de prise, et n'éliminez pas la broche de mise à la masse du câble. Si un câble de rallonge est nécessaire, utilisez un câble à 3 fils avec des fiches correctement mises à la terre.
- Respectez les caractéristiques nominales de la rallonge ou du bloc multiprise. Assurez-vous que l'intensité nominale totale de tous les produits branchés à la rallonge ou au bloc multiprise ne dépasse pas 80 % de l'intensité nominale limite de la rallonge ou du bloc multiprise.
- Pour protéger le système contre les pics et les chutes de tension transitoires et soudains, utilisez un parasurtenseur, un filtre de secteur ou une alimentation sans interruption (ASI).
- Positionnez les câbles système et les câbles d'alimentation avec soin. Acheminez les câbles de manière à ce qu'ils ne puissent pas être piétinés ou trébuchés. Veillez à ce que rien ne repose sur les câbles.
- Ne modifiez pas les câbles ou les fiches d'alimentation. Contactez un électricien qualifié ou la compagnie d'électricité si des modifications sur site sont nécessaires. Respectez toujours la règlementation locale ou nationale en matière de câblage.

Lors de la connexion ou de la déconnexion de l'alimentation vers et depuis des blocs d'alimentation enfichables à chaud, respectez les consignes suivantes:

- Installez l'alimentation avant d'y brancher le câble d'alimentation.
- Débranchez le câble d'alimentation avant de couper l'alimentation.
- Si le système possède plusieurs sources d'alimentation, mettez-le hors tension en débranchant tous les câbles d'alimentation des prises.
- Déplacez les appareils avec précaution et assurez-vous que les roulettes et/ou que les pieds stabilisateurs sont bien fixés au système. Évitez les arrêts brusques et les surfaces inégales.

Pour éviter d'endommager le système, assurez-vous que le commutateur de sélection de tension de l'alimentation est réglé sur l'alimentation disponible à l'emplacement du commutateur:

- 115 V/60 Hz est principalement utilisé en Amérique du Nord et du Sud, ainsi que dans des pays d'Extrême-Orient tels que la Corée du Sud et Taïwan.
- 100 V/50 Hz est utilisé principalement dans l'est du Japon et 100 V/ 60 Hz dans l'ouest du Japon.
- 230 V/50 Hz est principalement utilisé en Europe, au Moyen-Orient, en Afrique et en Extrême-Orient.

General Precautions for Rack-Mountable Products

Please pay careful attention to the following precautions concerning rack stability and safety. Systems are considered to be components in a rack. Thus, a component refers to any system, as well as to various peripherals or supporting hardware:

CAUTION: Installing systems in a rack without the front and side stabilizers installed could cause the rack to tip over, potentially resulting in bodily injury under certain circumstances. Therefore, always install the stabilizers before installing components in the rack. After installing system/components in a rack, never pull more than one component out of the rack on its slide assemblies at one time. The weight of more than one extended component could cause the rack to tip over and may result in serious injury.

ATTENTION : Le montage de systèmes sur un rack dépourvu de pieds stabilisateurs avant et latéraux peut faire basculer le rack, pouvant causer des dommages corporels dans certains cas. Par conséquent, installez toujours les pieds stabilisateurs avant de monter des composants sur le rack. Après l'installation d'un système ou de composants dans un rack, ne sortez jamais plus d'un composant à la fois hors du rack sur ses glissières. Le poids de plusieurs composants sur les glissières en extension peut faire basculer le rack, pouvant causer de graves dommages corporels.

- Before working on the rack, make sure that the stabilizers are secured to the rack, extended to the floor, and that the full weight of the rack rests on the floor. Install front and side stabilizers on a single rack or front stabilizers for joined multiple racks before working on the rack.
- Always load the rack from the bottom up, and load the heaviest item in the rack first.
- Make sure that the rack is level and stable before extending a component from the rack.
- Use caution when pressing the component rail release latches and sliding a component into or out of a rack; the slide rails can pinch your fingers.
- After a component is inserted into the rack, carefully extend the rail into a locking position, and then slide the component into the rack.
- Do not overload the AC supply branch circuit that provides power to the rack. The total rack load should not exceed 80 percent of the branch circuit rating.
- Ensure that proper airflow is provided to components in the rack.
- Do not step on or stand on any component when servicing other components in a rack.

CAUTION: Never defeat the ground conductor or operate the equipment in the absence of a suitably installed ground conductor. Contact the appropriate electrical inspection authority or an electrician if uncertain that suitable grounding is available.

ATTENTION : Ne neutralisez jamais le conducteur de masse et ne faites jamais fonctionner le matériel en l'absence de conducteur de masse dûment installé. Contactez l'organisme de contrôle en électricité approprié ou un électricien qualifié si vous n'êtes pas sûr qu'un système de mise à la masse adéquat soit disponible.

CAUTION: The system chassis must be positively grounded to the rack cabinet frame. Do not attempt to connect power to the system until grounding cables are connected. Completed power and safety ground wiring must be inspected by a qualified electrical inspector. An energy hazard will exist if the safety ground cable is omitted or disconnected.

ATTENTION : La carcasse du système doit être positivement reliée à la masse du cadre du rack. N'essayez pas de mettre le système sous tension si les câbles de mise à la masse ne sont pas raccordés. Le câblage de l'alimentation et de la mise à la masse de sécurité doit être inspecté par un inspecteur qualifié en électricité. Un risque électrique existe si le câble de mise à la masse de sécurité est omis ou débranché.

Protecting Against Electrostatic Discharge

Static electricity can harm delicate components inside the system. To prevent static damage, discharge static electricity from your body before touching any of the electronic components, such as the microprocessor. This can be done by periodically touching an unpainted metal surface on the chassis.

The following steps can also be taken prevent damage from electrostatic discharge (ESD):

- When unpacking a static-sensitive component from its shipping carton, do not remove the component from the antistatic packing material until ready to install the component in the system. Just before unwrapping the antistatic packaging, be sure to discharge static electricity from your body.

- When transporting a sensitive component, first place it in an antistatic container or packaging.
- Handle all sensitive components in a static-safe area. If possible, use antistatic floor pads, workbench pads and an antistatic grounding strap.

Additional Info

Documentation/Support/Warranty

Online Documentation / Documentazione online / Online Dokumentation / Documentación en línea / Documentazione online/ Документация онлайн / Documentação online / 線上文件 / Dokumentasi online / オンラインドキュメント / 在线文檔

www.dlink.com/resources/business

Online Support / Documentazione online / Online Dokumentation / Documentación en línea / Documentazione online/ Служба поддержки онлайн / Suporte técnico online / 線上支援/ Dukungan online / オンラインサポート / 在线支持

https://www.dlink.com/en/support

Warranty Information / Documentazione online / Online Dokumentation / Documentación en línea / Documentazione online/ Информация о гарантии / Informação de Garantia / 保固資訊/ Informasi garansi / 保証情報 / 質保信息

http://warranty.dlink.com