D-Link



Business Switch Product Catalog

One Connection · Infinite Possibilities

dlink-mea.com



Table of Contents

About D-Link ..... p.4—5

Product Overview ..... p.6—8

Backhaul Network Solutions p.9

Commercial Network Management ..... p.10—15

Product Portfolio ..... p.16—17

Data Center Switches ..... p.18—23

Core Switches ..... p.24—45

Aggregation Switches ..... p.46—63

Edge Switches – Stackable Smart ..... p.64—79

Edge Switches – Standard Smart ..... p.80—109

Edge Switches – Easy Smart ..... p.110—119

Unmanaged Switches ..... p.120—125

Accessories ..... p.126—128

About D-Link

D-Link, a global leader in the networking industry, began expanding worldwide under the D-Link brand in 1986 and was officially established as D-Link Corporation in Taiwan in 1987. With 90 operational and sales locations across 43 countries, D-Link provides innovative and reliable networking equipment, AI-powered cloud management services, and complete infrastructure solutions for individuals, homes, businesses, and industries. The company is committed to driving the global transformation toward smarter connectivity.

Built on the brand promise of MIT quality, creative innovation, solution-oriented approach, one-stop service, and sustainable design, D-Link delivers exceptional products and services that meet the evolving needs of users worldwide. Since joining the Taiwan Steel Group in 2020, the company has further solidified its position as a global leader in intelligent networking solutions. Through continuous innovation and a firm commitment to ESG, innovation, and global excellence, D-Link has earned widespread recognition in corporate governance, ESG performance, and international design awards.

Looking ahead, D-Link will further integrate global resources to strengthen operational synergy, reinforce its leadership in the smart networking industry, and realize its brand vision “One Connection • Infinite Possibilities.”

MIT QUALITY



Taiwanese engineering excellence: precision, reliability, and innovation at its core.

CREATIVE INNOVATION



Pioneering next-gen networking through visionary R&D and user-centric design.

SOLUTION ORIENTED



Intelligent, adaptable solutions empowering homes, businesses, and industries.

ONE-STOP SERVICE



Comprehensive solutions with seamless support for an effortless experience.

SUSTAINABLE DESIGN



Eco-conscious innovation with energy-efficient technology and green packaging for a sustainable future.

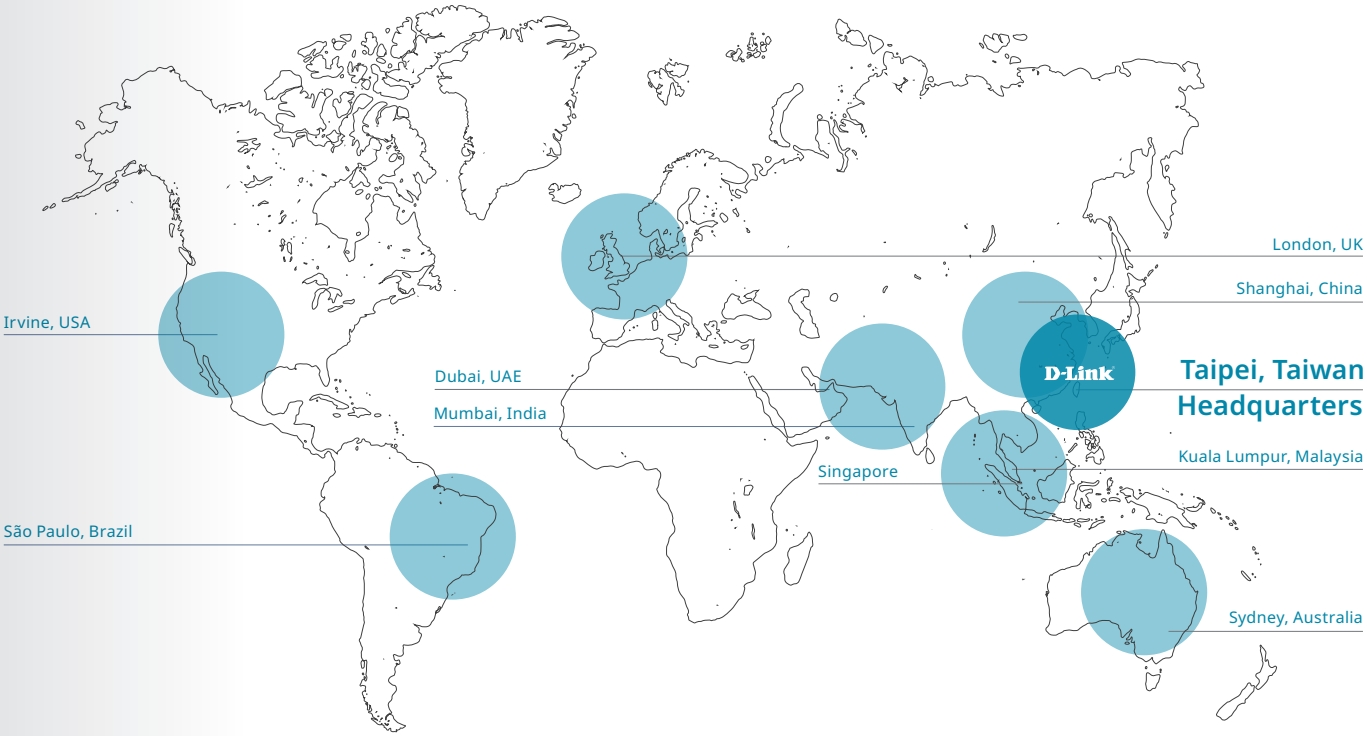

40+ Years of networking experience

90 Sales offices in 43 countries

35 RMA centers

1,460+ Employees globally

High-Performance SONiC-Ready Switches for Data Centers

From the server rack to the data center core, the DTS family delivers high-density 25G, 100G and 400G connectivity in a compact 1RU form factor. The DTS-5000-56S, DTS-5100-32S and DTS-5400-32S provide up to 12.8 Tbps of switching capacity (25.6 Tbps full duplex) for Top-of-Rack, Leaf, Spine and aggregation deployments. Pre-installed with ONIE, the switches enable fast and flexible deployment of network operating systems such as SONiC. Advanced BGP, EVPN, VXLAN, VRF and MC-LAG support scalable multi-tenant connectivity for modern Spine-Leaf fabrics, while redundant hot-swappable power supplies and fans with front-to-back airflow provide high reliability for demanding data center environments.

Data Center Switches

High-Speed 25G / 100G / 400G

- Three 1RU models with 25G, 100G and 400G ports and up to 12.8 Tbps switching capacity (25.6 Tbps full duplex)
- ONIE pre-installed and SONiC-ready, with BGP, EVPN, VXLAN, VRF and MC-LAG for scalable data center fabrics



DTS-5000-56S



DTS-5100-32S



DTS-5400-32S

Comprehensive Switch Solutions for Building Backhaul Networks

From core and aggregation to edge switches, our solutions cover the entire three-layer network architecture, catering to diverse business environments. This includes enterprise-level offices, educational campuses of all sizes, retail stores, residential buildings, hotels, and large communities. Intelligent PoE and unmanaged switches simplify client setups by delivering power and data through a single Ethernet cable, reducing cabling needs and ensuring reliable connectivity for client devices. Meanwhile, enterprise APs provide dependable connectivity and seamless coverage in high-density Wi-Fi environments.

Core Switches

High-Speed 10G / 25G / 100G

- High-speed 10G / 25G / 100G ports enable fast data transfers at the core layer
- Ensures quick access to resources and minimizes delays for smoother, more efficient network performance



DGS-9600E Series



DGS-8600E Series



DGS-3630 Series



DXS-3410 Series



DXS-F3500 Series



DXS-3610 Series

Aggregation Switches

Increased Bandwidth up to 10G / 25G

- Physical stacking with single IP management for aggregation switches, optimizing traffic flow between access and core layers
- ERPS connects multiple buildings, enhancing device connectivity, while aggregation switches improve performance and security



DGS-F1500 Series



DGS-3130 Series



DMS-3130 Series



DXS-3130 Series

Edge Switches

Adaptive Ethernet 1G / 10G / 25G

- Stackable smart switches: Effortlessly expand network capacity with seamless integration, supporting multiple port speeds
- Standard smart switches: Deliver high-speed 2.5GE connectivity for PCs, NAS devices, AI-enabled workstations, and CAD/graphics workstations, ensuring smooth data transfers and reliable performance in demanding applications.
- Easy smart switches: Streamline installation and setup, reducing time and effort in network maintenance



DGS-1510 Series Stackable



DGS-1520 Series Stackable



DGS-1530 Series Stackable



DGS-1210 Series Standard



DGS-F1210 Series Standard



DXS-1210 Series Standard



DGS-1250 Series Standard



DMS-1250 Series Standard



DGS-1100 Series Easy

Unmanaged Switches

Plug-and-Play 10M / 100M / 1G / 2.5G Connectivity

- Unmanaged switches are quick and easy to set up, requiring no configuration
- Enough bandwidth for demanding edge applications and PoE connectivity for hassle-free deployments



DES-1000 Series



DES-F1000 Series



DGS-1000 Series



DGS-F1000 Series



DMS-1000 Series

Simplified Cost-Saving Connectivity

- PoE switches reduce deployment time by eliminating the need to install power outlets
- PoE capability eliminates power cabling costs for devices like IP cameras, VoIP phones, and wireless access points



DGS-3630 Series Core
- DGS-3630-28PC
- DGS-3630-52PC



DGS-F1500 Series Aggregation
- DGS-F1500-28MP
- DGS-F1500-52MP



DGS-3130 Series Aggregation
- DGS-3130-30PS
- DGS-3130-54PS



DMS-3130 Series Aggregation
- DMS-3130-30PS



DXS-3130 Series Aggregation
- DXS-3130-28P



DGS-1510 Series Edge
- DGS-1510-28XMP
- DGS-1510-52XMP



DGS-1520 Series Edge
- DGS-1520-28MP
- DGS-1520-52MP



DGS-1530 Series Edge
- DGS-1530-28P
- DGS-1530-52P



DGS-1210 Series Edge
- DGS-1210-10P
- DGS-1210-10MP
- DGS-1210-28P
- DGS-1210-28MP
- DGS-1210-52MP
- DGS-1210-52MPP



DGS-F1210 Series Edge
- DGS-F1210-26PS-E
- DGS-F1210-18PS-E



DXS-1210 Series Edge
- DXS-1210-10MP



DGS-1250 Series Edge
- DGS-1250-28XMP
- DGS-1250-52XMP



DMS-1250 Series Edge
- DMS-1250-10SP
- DMS-1250-12TP
- DMS-1250-18P
- DMS-1250-28P



DXS-1250 Series Edge
- DXS-1250-28YP



DGS-1100 Series Edge
- DGS-1100-08PV2
- DGS-1100-18PV2
- DGS-1100-24PV2
- DGS-1100-26MPV2



DGS-F1100 Series Edge
- DGS-F1100-10PS-E



DES-F1000 Series Unmanaged
- DES-F1006P-E
- DES-F1010P-E
- DES-F1016P-E



DGS-1000 Series Unmanaged
- DGS-1005P
- DGS-1008P
- DGS-1010P
- DGS-1018P
- DGS-1026P



DGS-F1000 Series Unmanaged
- DGS-F1006P-E
- DGS-F1010P-E
- DGS-F1026P-E



DMS-1000 Series Unmanaged
- DMS-108P

Backhaul Network Solutions: From Core to Edge

The core layer operates at speeds of up to 100G (including 1G, 10G, 25G, 40G, and 100G), providing a stable and scalable foundation for large networks. The aggregation layer boosts connectivity by merging links into high-capacity interfaces, enhancing network capacity and ensuring smooth data flow between the core and edge layers. The edge layer manages and secures device connections, handles data traffic efficiently, and delivers low-latency access to client devices while boosting overall performance.

For businesses of all sizes, from small and medium-sized enterprises to large organizations, D-Link offers comprehensive solutions, including enterprise Wi-Fi, business IP cameras, SMB gateways, and high-performance switches, to ensure robust and scalable network infrastructure for diverse business scenarios.

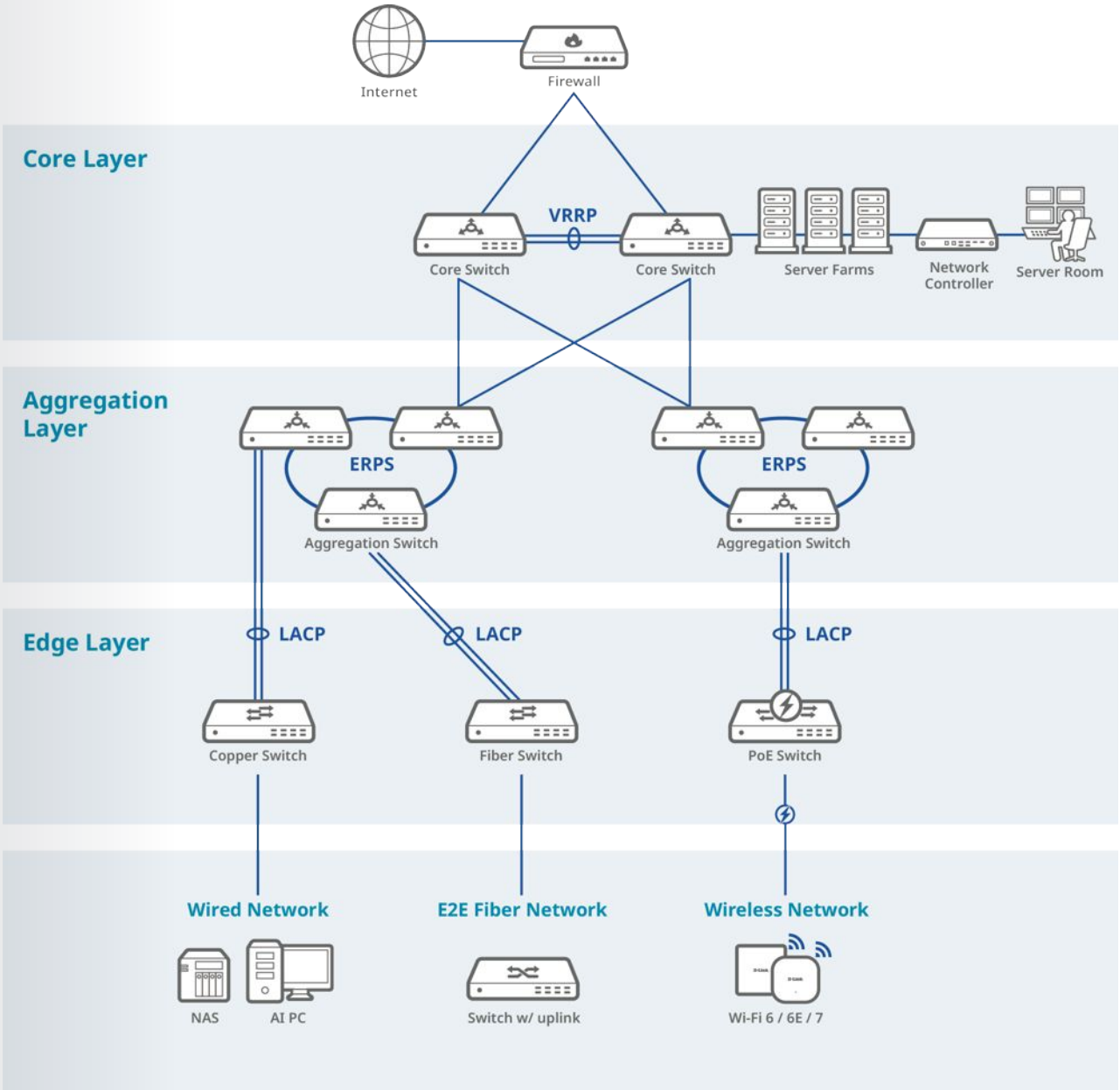

Commercial Network Management

D-Link Commercial Network Management is a flexible, scalable platform offering both cloud and on-premise options. With Nuclias Unity, users can manage networks anytime through an intuitive web interface, simplifying operations. For greater control and data privacy, the Nuclias Network Controller provides a robust on-premise solution with flexible scalability. By combining both approaches, D-Link enables businesses to choose the management model that best fits their needs.



D-Link's commercial network management solution integrates cloud and on-premise architectures, with the Nuclias series enabling flexible deployment from large enterprises to small businesses. It supports diverse environments—such as F&B, education, retail, manufacturing, and government—delivering centralized management and efficient operations.

Hospitality | **Multi-Dwelling Unit** | **Enterprise** | **Retail** | **Manufacturing** | **Government**


Resorts


Smart Communities


Multinational Corporations


Shopping Malls


Large-scale Factories


Central Government


Business Hotels


Apartment Complexes


SMBs


Department Stores


Medium-scale Factories



Provincial Government

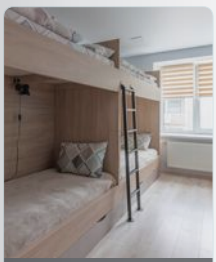
Guesthouses


Small Condominiums


Startups


Convenience Stores


Small-scale Factories


City Government

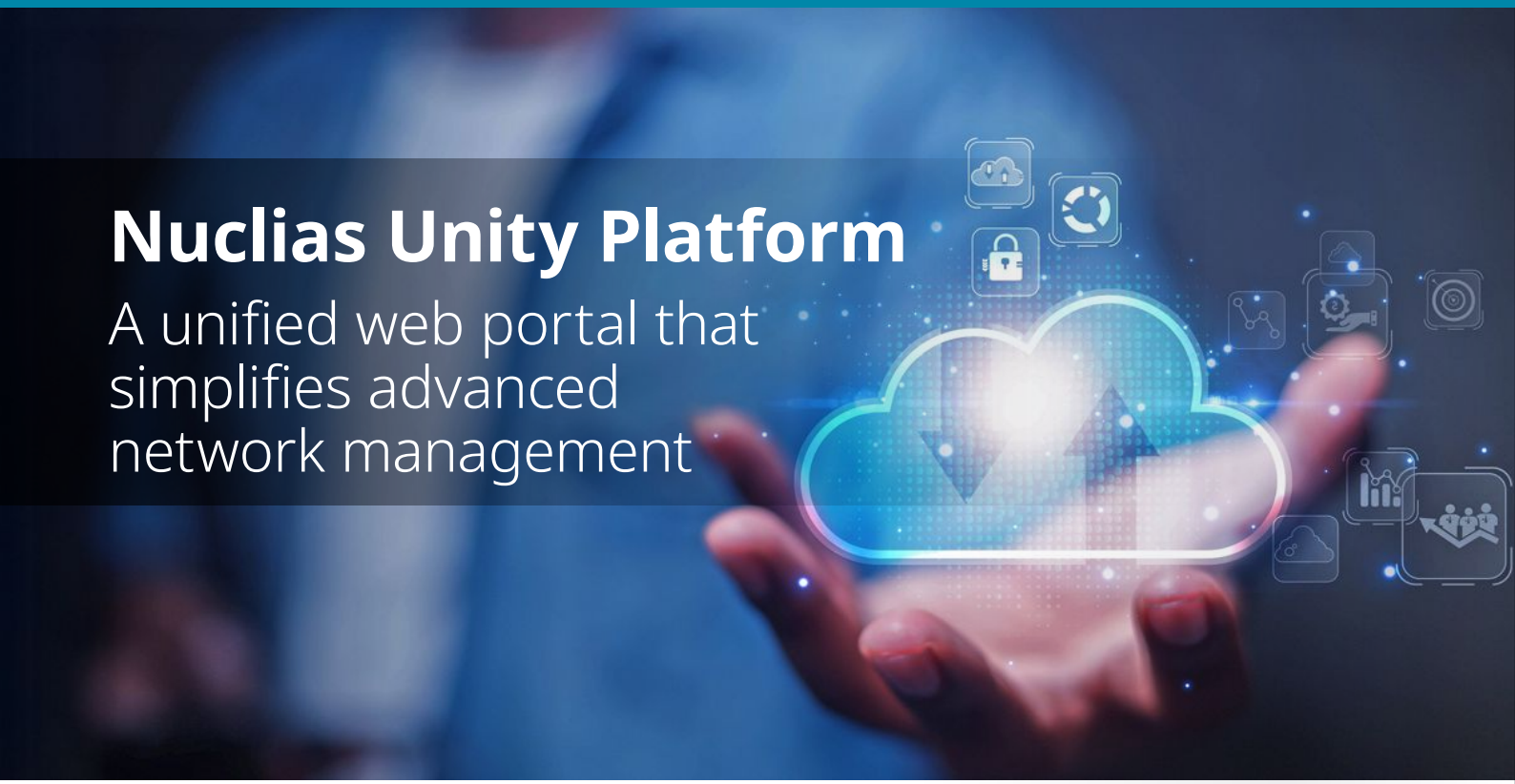

Nuclias Unity Platform

A unified web portal that simplifies advanced network management

Nuclias Unity is a cloud-based network management platform that simplifies modern network operations with centralized control and real-time monitoring across D-Link switches and access points. It supports multi-site management with an intuitive interface for dashboard viewing, configuration, reporting, and alerts. By unifying AP and switch management, it helps IT teams improve efficiency, reduce operational overhead, and scale networks more easily.

Supported Products

Unified management of all business APs and switches, with features and supported models introduced in phases





Cloud Management

- Dashboard
- Account Management
- Organization Management
- Monitoring
- Configuration
- Reports
- Alerts



User Benefits

Hardware-Free Network Operations

Simplified network control. Get enterprise-grade reliability and stability without the cost and complexity of on-premises hardware. It is simple, secure, and designed for effortless operations.

Role-Based Access Control

Assign precise permissions and capture every change in detailed audit logs. Achieve clear accountability, simplify reporting, and enforce scalable security—automatically.

One-Click Network Deployment

Configure once and deploy everywhere. Automate consistent network policies across all sites in seconds, eliminating manual configuration errors at any operational scale.

Manage Multiple Sites in One Place

View and control all your customers, branches, and locations in a single dashboard, while keeping each organization cleanly separated. It provides clarity at scale for service providers and multi-site business needs.

Explore the Possibilities

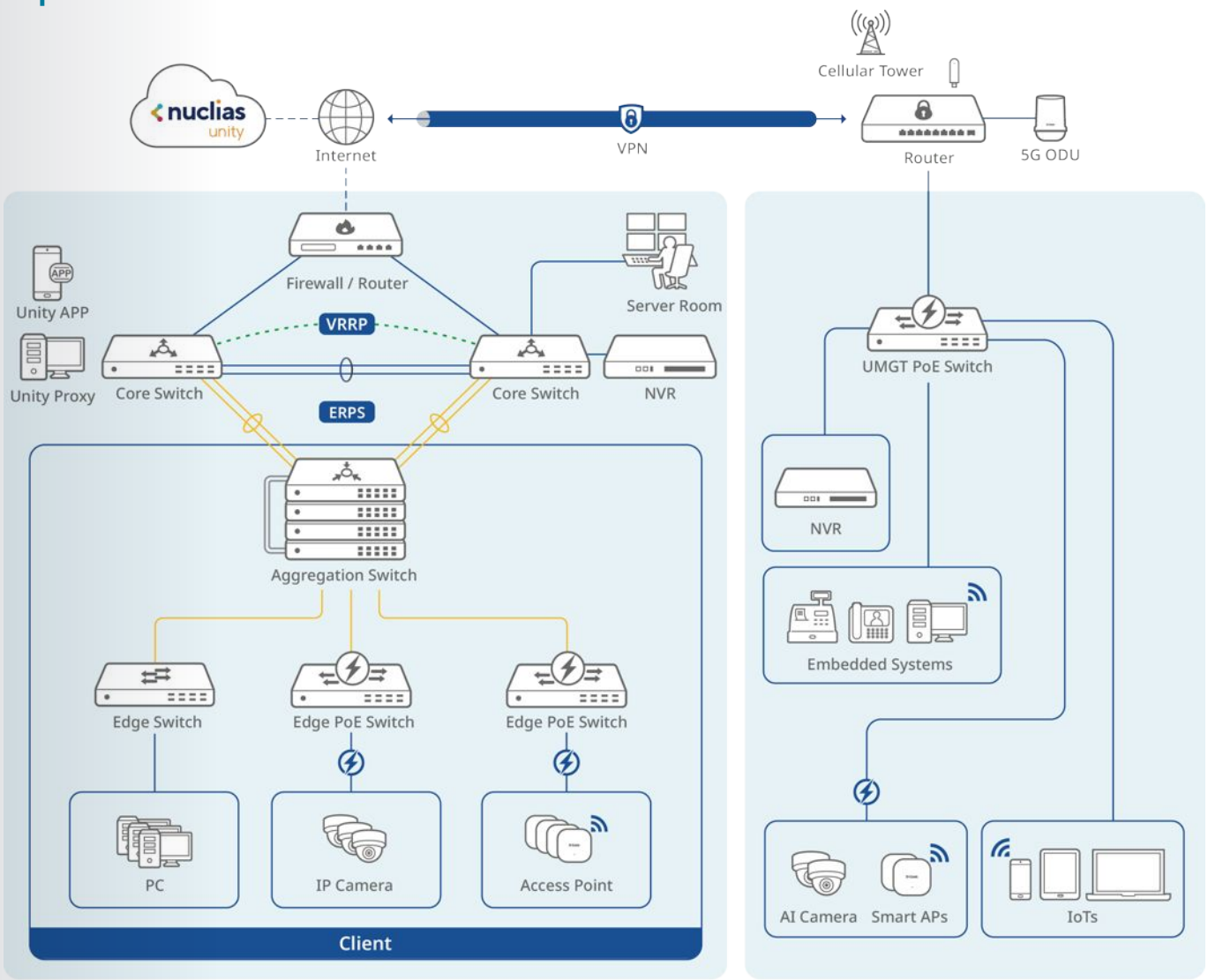

Nuclias Network Controllers

The Nuclias Network Controller is D-Link's advanced network management solution, evolving from a basic management tool into a robust and scalable networking platform tailored for diverse environments. Designed to adapt to customer requirements, the platform offers flexible deployment options, including Nuclias hardware controllers—ranging from the DNH-1000 for small to medium networks to the DNH-3000 for medium-to-large-scale environments—and the Nuclias Hyper software controller (DNC-5000) for large-scale infrastructures.

Embodying D-Link's commitment to innovation and user-focused design, the Nuclias Network Controller is an entirely on-premises solution. Unlike cloud-reliant systems, it ensures exceptional data privacy, minimizes dependence on internet connectivity, and provides complete control over network operations.

Single Site

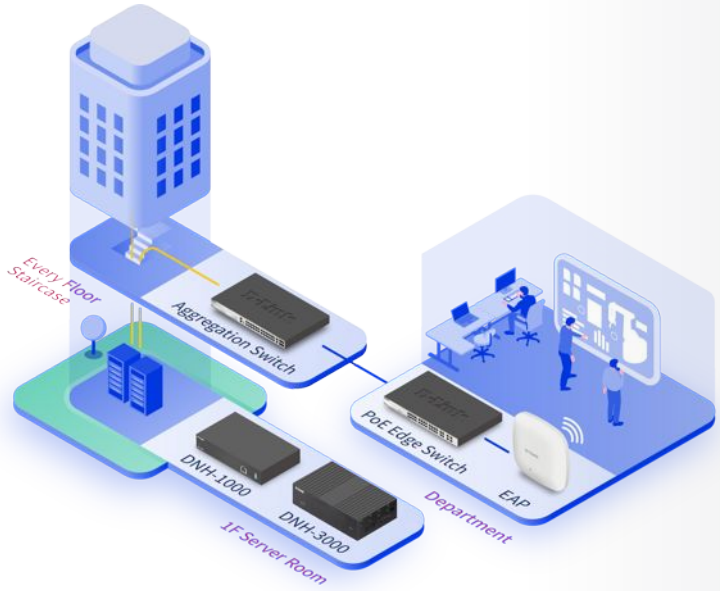

Multi-Site

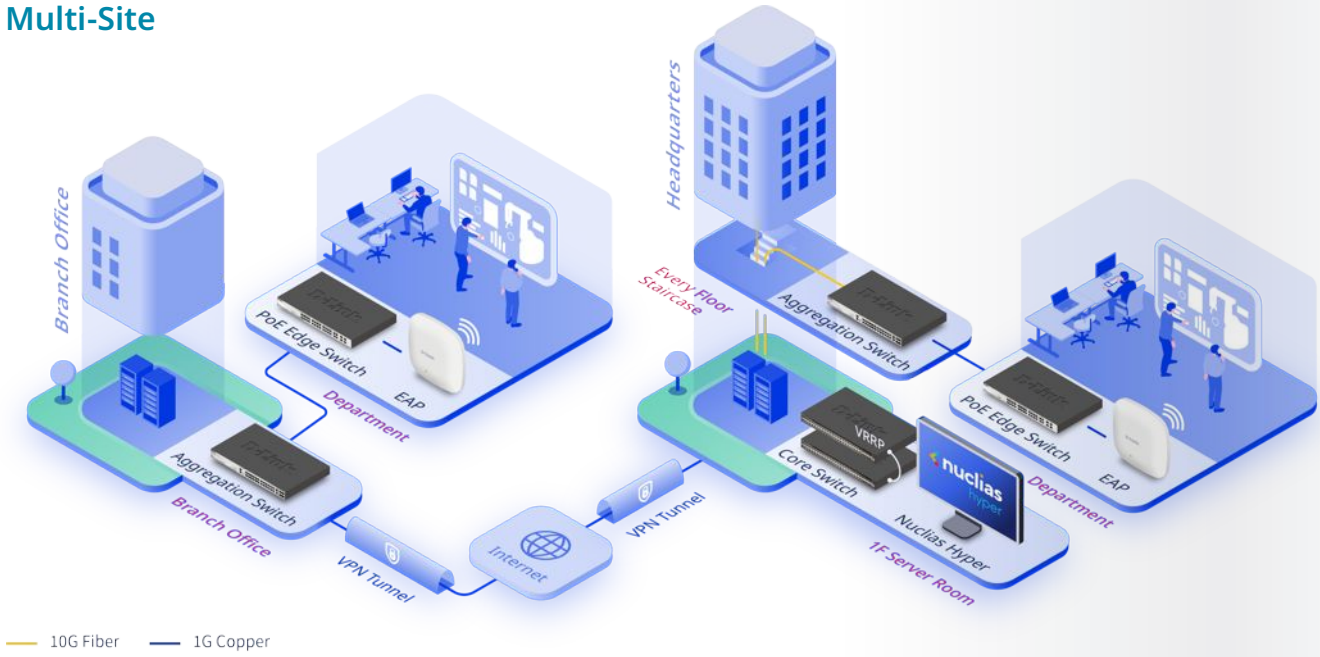

Small to Medium Network

Nuclias Connect

- Designed for small to medium networks, the DNH-1000 features built-in Nuclias Connect software and enables management of up to 500 devices (APs / switches)

nuclias connect



DNH-1000

- 1 x 2.5GE LAN
- 1 x USB 3.0
- Up to 500 devices
- Nuclias Connect built in
- Manage all APs and Aggregation / Edge Switches
- Hardware Controller

Medium to Large Network

Nuclias Connect

- With the Nuclias Connect management platform, the DNH-3000 enables centralized management and monitoring of up to 1,500 devices, streamlining network management tasks and enhancing IT efficiency

nuclias connect



DNH-3000

- 2 x 10G SFP+ + 4 x 1G
- 1 x USB 3.2
- Up to 1,500 devices
- Nuclias Connect built in
- Manage all APs and Aggregation / Edge Switches
- Hardware Controller

Large Network

Nuclias Hyper

- Tailored for multi-site network infrastructures, the Nuclias software controller manages up to 2,000 switches and wireless APs

nuclias hyper



DNC-5000

- Linux / Windows Support
- Up to 2,000 devices
- Manage all APs and core / aggregation / edge switches
- Software Controller

Product Portfolio

D-Link's switching and network management solutions deliver best-in-class performance. We offer standardized technology with industry-leading functionality integrated into highly scalable, manageable, reliable, secure, and efficient solutions that are easy to implement, all at a highly competitive cost.

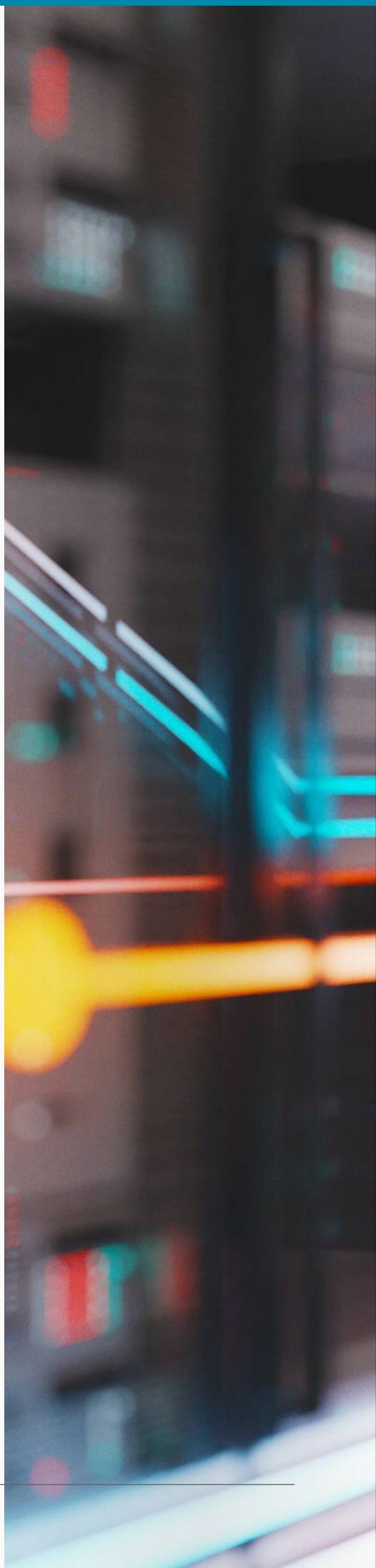





Data Center Switches

25G to 400G in One Rack Unit
SONiC-Ready with ONIE

25G/100G/400G

High Data Throughput

OS

SONiC-Ready with ONIE

Scalable and Flexible

Power and Fan Redundancy

Standard Dynamic Routing Protocol

QoS

Data Center QoS PFC and ECN

VXLAN

Flexible EVPN VXLAN

Zero-Touch Provisioning

High-Performance 25G, 100G and 400G Switches for Scalable Data Center Networks

The DTS-5000-56S, DTS-5100-32S and DTS-5400-32S are high-density 1RU data center switches with 25G, 100G and 400G ports and up to 12.8 Tbps of switching capacity (25.6 Tbps full duplex). Advanced BGP, EVPN, VXLAN and MC-LAG enable scalable multi-tenant connectivity, while VRF, BGPv4/v6, OSPF and ECMP provide resilient and flexible routing. ONIE is pre-installed for fast, flexible deployment of network operating systems such as SONiC.

The DTS family brings high-performance data center switching to networks of every size. The DTS-5000-56S connects servers and storage with 48 × 25G SFP28 ports and 8 × 100G QSFP28 uplinks. The DTS-5100-32S offers 32 × 100G QSFP28 ports for Top-of-Rack, Leaf, Spine and high-speed aggregation roles, and the DTS-5400-32S provides 32 × 400G QSFP-DD ports for high-capacity aggregation, Leaf or Spine layers. All three are compact 1RU switches with front-to-back airflow, 1+1 redundant hot-swappable power supplies and N+1 hot-swappable fans.

Explore the Possibilities

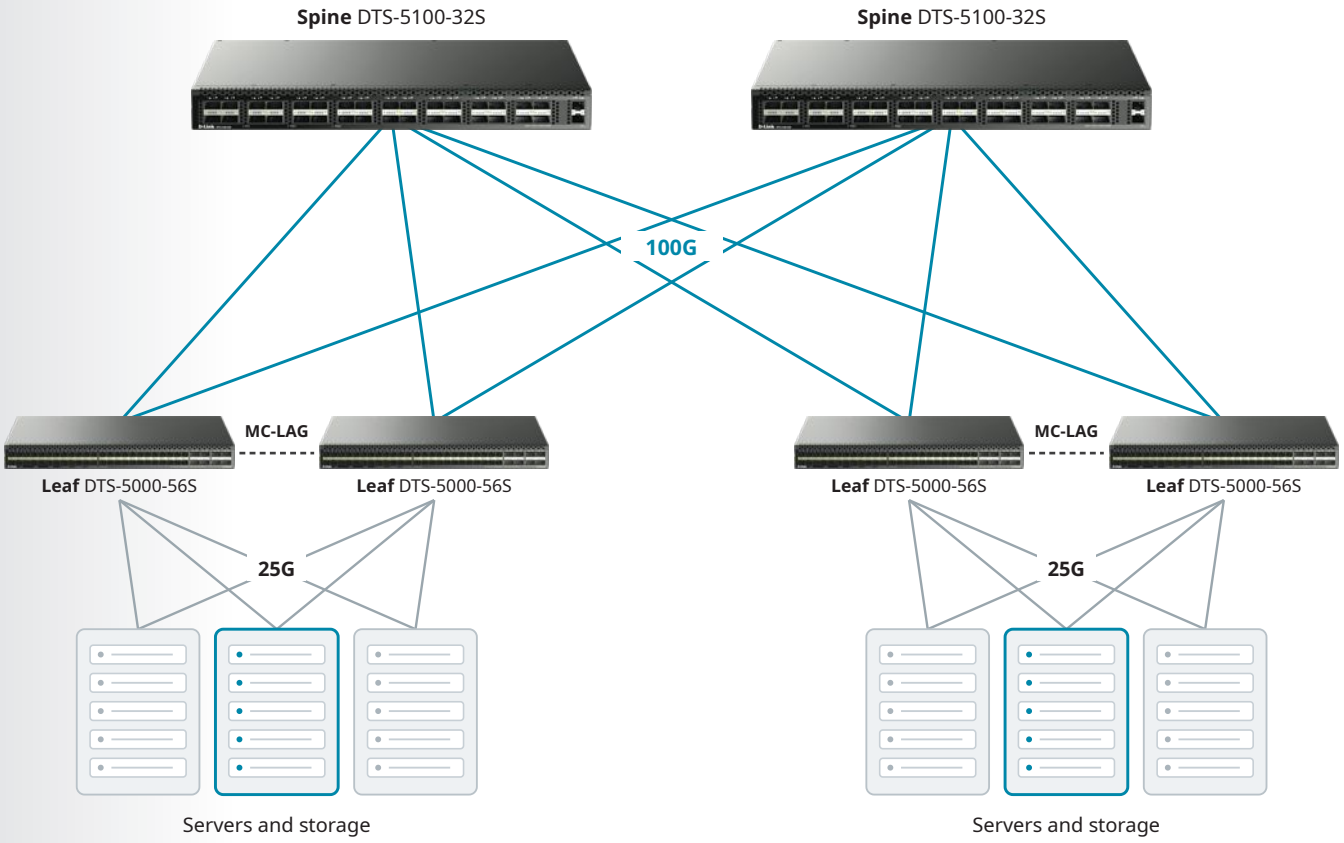



Scale up with the DTS-5400-32S

32 × 400G QSFP-DD and 2 × 10G SFP+ ports, 12.8 Tbps (25.6 Tbps full duplex), for high-capacity aggregation, Leaf or Spine layers in a Spine-Leaf fabric.

Data Center Switches

- SONiC-ready, with ONIE pre-installed
- EVPN, VXLAN, MC-LAG and VRF for scalable multi-tenant fabrics
- 25G, 100G and 400G ports in a compact 1RU design

Series	Model	Description
DTS-5000	DTS-5000-56S	48 Ports 25G SFP28 + 8 Ports 100G QSFP28 Data Center Switch
DTS-5100	DTS-5100-32S	32 Ports 100G QSFP28 + 2 Ports 10G SFP+ Data Center Switch
DTS-5400	DTS-5400-32S	32 Ports 400G QSFP-DD + 2 Ports 10G SFP+ Data Center Switch

DTS-5000 / 5100 / 5400 Series

25G to 400G Layer 3 Data Center Switches

Three compact 1RU models
ONIE pre-installed, SONiC-ready

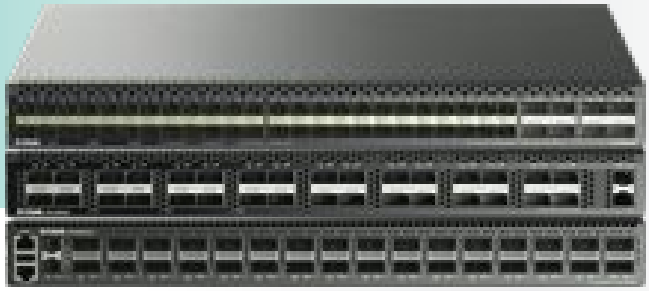



SONiC-Ready with ONIE

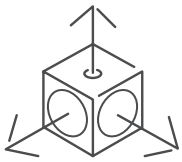

Scalable and Flexible

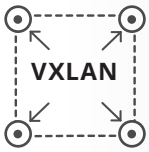

Flexible EVPN VXLAN



Standard Dynamic Routing Protocol

Advanced Hardware

DTS-5000-56S: 48 × 25G SFP28 + 8 × 100G QSFP28
DTS-5100-32S: 32 × 100G QSFP28 + 2 × 10G SFP+
DTS-5400-32S: 32 × 400G QSFP-DD + 2 × 10G SFP+
4.0 / 6.4 / 25.6 Tbps full duplex switching capacity
2 hot-swappable PSUs (1+1), hot-swappable fans (N+1)
Front-to-back airflow, compact 1RU 19-inch design

L3

Routing Protocols
BGP4 / BGP4+, OSPFv2 / v3
Virtual Routing and Forwarding (VRF)
ECMP, up to 64 paths per route
BFD for static routes, OSPF and BGP
IPv4 / IPv6 static and default routes
Routing restart for OSPF and BGP
Routing table: up to 288K entries
Static routes: IPv4 up to 288K, IPv6 up to 144K
ARP / ND: up to 96K entries

Management

Command Line Interface (CLI)
SNMP v1 / v2c / v3, LLDP, syslog
Zero-touch provisioning (ZTP), sFlow
ONIE pre-installed, SONiC-ready
Dual images, multiple configurations
DHCP client and relay, TFTP client

L2

Features / Security
VXLAN and EVPN
MC-LAG
PFC (802.1Qbb), ECN, RoCEv2
Spanning Tree (STP / RSTP / MSTP)
128K MAC entries, jumbo frames up to 9K
Port mirroring (one-to-one, many-to-one)
ACL: up to 4.5K ingress / 1K egress entries
SSH v2, storm control
AAA, authentication database failover

High Performance, High Density, and High Availability



Intelligent Traffic Management, Provisioning, and Visibility

- Scalable Spine-Leaf data center fabrics
- ECMP with up to 64 paths per route
- Multi-tenant segmentation with EVPN, VXLAN and VRF
- RoCEv2 with PFC and ECN
- Zero-touch provisioning (ZTP) and sFlow

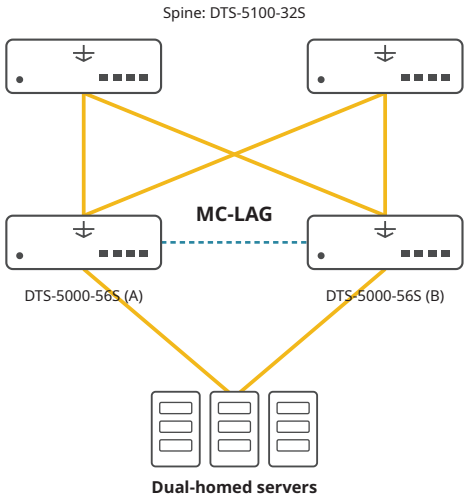

Data Center Switches / DTS-5000-56S, DTS-5100-32S, DTS-5400-32S

Model	DTS-5000-56S	DTS-5100-32S	DTS-5400-32S
Product Image			
Hardware			
Number of 10G SFP+ Ports	-	2	2
Number of 25G SFP28 Ports	48	-	-
Number of 100G QSFP28 Ports	8	32	-
Number of 400G QSFP-DD Ports	-	-	32
Switching Capacity	2.0 Tbps (4.0 Tbps full duplex)	3.2 Tbps (6.4 Tbps full duplex)	12.8 Tbps (25.6 Tbps full duplex)
Packet Forwarding Rate	2800 Mpps	2800 Mpps	5600 Mpps
Packet Buffer Memory	24 MB	24 MB	48 MB
MAC Address	128K	128K	128K
Memory / Storage	8 GB DDR4 / 128 GB M.2 SATA	8 GB DDR4 / 128 GB M.2 SATA	8 GB DDR4 / 128 GB M.2 SATA
Power Supply Units	2, hot-swappable	2, hot-swappable	2, hot-swappable
Redundant Power Supply	1 + 1	1 + 1	1 + 1
Power Input	AC 100-127V or 200-240V (90-264V) DC 180-300V	AC 100-127V or 200-240V DC 180-300V	AC 100-127V or 200-240V DC 180-300V
Max. Power Consumption	274 W	300 W	940 W
Fan	4 (N + 1 redundant), hot-swappable	4 (N + 1 redundant), hot-swappable	6 (N + 1 redundant), hot-swappable
Airflow	Front-to-back	Front-to-back	Front-to-back
Acoustics (Min. / Max.)	56.6 / 80.6 dBA	56.6 / 80.6 dBA	57.3 / 80.5 dBA
Dimension (W x D x H)	440 x 420 x 44 mm	440 x 420 x 44 mm	440 x 488 x 45 mm
Weight	11.5 kg	11.5 kg	13 kg
Management Port	1 x 10/100/1000BASE-T RJ-45	1 x 10/100/1000BASE-T RJ-45	1 x 10/100/1000BASE-T RJ-45
Console Port (RJ-45)	✓	✓	✓
USB Port	1 x USB 2.0 Type A	1 x USB 2.0 Type A	1 x USB 2.0 Type A
Operating Temperature	0 to 40°C (32 to 104°F)	0 to 40°C (32 to 104°F)	0 to 40°C (32 to 104°F)
Storage Temperature	-40 to 70°C (-40 to 158°F)	-40 to 70°C (-40 to 158°F)	-40 to 70°C (-40 to 158°F)
Humidity (Operating / Storage)	10% to 90% RH	10% to 90% RH	10% to 90% RH
Certifications	Safety: CE / EMI: CE Class A	Safety: CE / EMI: CE Class A	Safety: CE / EMI: CE Class A
L2			
Spanning Tree	STP, RSTP, MSTP	STP, RSTP, MSTP	STP, RSTP, MSTP
VLAN	✓	✓	✓
VXLAN	✓	✓	✓
Port Mirroring	One-to-one, many-to-one, Tx / Rx	One-to-one, many-to-one, Tx / Rx	One-to-one, many-to-one, Tx / Rx
Jumbo Frame	Up to 9K	Up to 9K	Up to 9K
Data Center / SDN			
MC-LAG	✓	✓	✓
ONIE	Pre-installed	Pre-installed	Pre-installed
Priority-Based Flow Control (PFC)	✓	✓	✓
Explicit Congestion Notification (ECN)	✓	✓	✓
RoCEv2	✓	✓	✓

Model	DTS-5000-56S	DTS-5100-32S	DTS-5400-32S
Product Image			
L3			
IPv4 / IPv6 Interfaces	✓	✓	✓
Routing Table	Up to 288K	Up to 288K	Up to 288K
Static Route for IPv4 / IPv6	288K / 144K	288K / 144K	288K / 144K
ARP / ND Entries	96K / 96K	96K / 96K	96K / 96K
ECMP (Max. Paths per Route)	64	64	64
OSPF v2 / v3	✓	✓	✓
BGP4 / BGP4+	✓	✓	✓
Bidirectional Forwarding Detection (BFD)	✓	✓	✓
Routing Restart (OSPF, BGP)	✓	✓	✓
Advanced Features			
EVPN	✓	✓	✓
VRF	✓	✓	✓
QoS			
Queue Scheduling	SP, WDRR, DWRR	SP, WDRR, DWRR	SP, WDRR, DWRR
WRED	✓	✓	✓
Bandwidth Control (Min. Granularity)	8 kbps	8 kbps	8 kbps
Ingress / Egress Bandwidth Control	✓	✓	✓
ACL			
ACL Entry (Ingress / Egress)	4.5K / 1K	4.5K / 1K	4.5K / 1K
Security			
SSH	SSH v2 (IPv4 / IPv6)	SSH v2 (IPv4 / IPv6)	SSH v2 (IPv4 / IPv6)
Broadcast / Multicast / Unicast Storm Control	✓	✓	✓
AAA			
Authentication Database Failover	✓	✓	✓
Trusted Hosts	✓	✓	✓
Management			
SNMP	v1 / v2c / v3	v1 / v2c / v3	v1 / v2c / v3
sFlow	✓	✓	✓
ZTP	✓	✓	✓
Command Line Interface (CLI)	✓	✓	✓
LLDP	✓	✓	✓
System Log (Severity Levels)	8	8	8
DHCP Client / Relay	✓	✓	✓
Dual Images	✓	✓	✓

DGS-9600E Series

Modular Chassis Switches



The DGS-9600E Series provides high-performance L2/L3/L4 wire speed switching capacity by integrating services such as IPv6, network security, flow analysis, virtualization, with highly reliable techniques including continuous forwarding, graceful restarting and loop network protection.

The DGS-9600E Series features green technology that significantly reduces energy consumption.

The DGS-9600E Series offers two chassis options, DGS-9608E and DGS-9614E supporting a wide range of port modules including but not limited to 100G and PoE options.

Designed for today's demanding networks, the DGS-9600E Series delivers high availability and resiliency with redundant power supplies, fans, and supervisor modules to ensure nonstop network operation.

Ideal for data centers, service provider networks, and large enterprise deployments that require scalable performance, advanced services, and future-ready architecture.

Built with modular flexibility, advanced management tools, and comprehensive security, the DGS-9600E Series is engineered to grow with your business and simplify network operations.

Chassis and Modules

Chassis

DGS-9608E 8-slot chassis including fan tray	DGS-9614E 14-slot chassis including fan tray

Control Modules (Management)

9608E-CM Control module for DGS-9608E	9614E-CM Control module for DGS-9614E

Power Supply Modules

9600E-PWR-AC 1300W AC system power supply	9600E-PWR-POE 1200W AC PoE power supply

Copper-Oriented Line Cards

9600E-24T24S 24 x 1000BASE-T and 24 x SFP port line card	9600E-48T 48 10/100/1000Base-T Ports line card	9600E-48P 48 10/100/1000Base-T PoE+ line card	9600E-24T8XS 24 10/100/1000Base-T Ports and 8 x 10G SFP+ ports line card

Fiber / High-Speed Line Cards

9600E-48S 48 SFP Ports line card module	9600E-24S8XS 24 SFP Ports and 8 x 10G SFP+ ports line card	9600E-16XS 16 Ports 10G SFP+ line card	9600E-48XS 48 Ports 10G SFP+ line card	9600E-4QS 4 Ports 40G QSFP+ line card	9600E-24XS6QS 24 Ports 10G SFP+ and 6 Ports 40G QSFP+ line card	9600E-6QS28 6 Ports 100G QSFP28 line card module

Model		DGS-9608E	DGS-9614E
Switch Functionality		Layer 3	Layer 3
Chassis Module Slots		8	14
Control Module Slots		2	2
Line Card Slots		6	12
Maximum Ports	GE	288	576
	10G	288	576
	40G	36	72
	100G	36	72
Power Supply		Six hot-swappable internal One PoE+ hot-swappable internal	Six hot-swappable internal One PoE+ hot-swappable internal
Scalability	MAC address table size	32k	32k
	Stacking/VSS	ü	ü
	Stacking/VSS bandwidth	20G/1600G	
Power over Ethernet	PoE Standards	IEEE 802.3af/at	
	Max PoE power	1200W	
	Max PoE ports (15.4W/30W)	78/40	
Environmental	Fan	Hot-swappable fan tray	
	Operating temperature	0°C to 40°C	
	Operating humidity	10%-90% non-condensing	
Management		Console/Telnet/SSH/SNMP	
Network Resilience	Spanning tree	✓	
	Link aggregation (LACP)	✓	
	ISSU	✓	
	VRRP v2/v3	✓	
QoS		✓	
Security	IEEE 802.1Q VLANs	4K	
	RADIUS / TACACS+	✓	
	SSH	✓	
	IEEE 802.1X	✓	
	DoS protection	✓	
	DHCP snooping	✓	
Routing	Static routes v4 / v6	✓	
	RIP / RIPng	✓	
	OSPFv2 / v3	✓	
	VRF Lite	✓	
	Policy-based routing	✓	
	BGP4 / BGP4+	✓	
Multicasting	IGMPv1 / v2 / v3	✓	
	MLDv1 / v2	✓	
	PIMv4 / PIMv6	✓	
	PIM-SSM	✓	

DGS-8600E Series

Modular Chassis Switches



The DGS-8600E Chassis-Based Switch Series is intelligent and high-performance multi-layer LAN devices designed for enterprise local area networks (LAN), campus, and metropolitan area networks (MAN).

The DGS-8600E Series provides high-performance L2/L3/L4 wire-speed switching capacity.

It integrates services such as IPv6, network security, flow analysis, and virtualization.

High reliability techniques include continuous forwarding, graceful restarting, and loop network protection.

The DGS-8600E Series supports Green Architecture, it significantly reduces equipment energy consumption and cuts operation and maintenance costs.

The DGS-8600E Series consists of three models: DGS-8603E, DGS-8606E, and DGS-8610E, to meet the port density and performance requirements of different network scales.

Chassis and Modules

Chassis

DGS-8603E 3-slot chassis including fan tray	DGS-8606E 6-slot chassis including fan tray	DGS-8610E 10-slot chassis including fan tray

Control Modules (Management)

8603E-CM24S8XS Control module for DGS-8603E with 24 x GE SFP ports and 8 x 10G SFP+ ports	8603E-CM24T8XS Control module for DGS-8603E with 24 x GE TX (RJ45) ports and 8 x 10G SFP+ ports	8606E-CM Control module for DGS-8606E	8610E-CM Control module for DGS-8610E

Copper-Oriented Line Cards

8600E-24T24S 24 x 1000BASE-T and 24 x SFP port line card	8600E-48T 48 10/100/1000Base-T Ports line card	8600E-24T8XS 24 10/100/1000Base-T Ports and 8 x 10G SFP+ ports line card

Power Supply Modules

8600E-350AC 350W AC system power supply for DGS-8603E & DGS-8606E	8600E-550AC 550W AC system power supply for DGS-8610E

Fiber / High-Speed Line Cards

8600E-48S 48 SFP Ports line card module	8600E-24S8XS 24 SFP Ports and 8 x 10G SFP+ ports line card	8600E-16XS 16 Ports 10G SFP+ line card	8600E-4QXS 4 Ports 40G QSFP+ line card

Model		DGS-8603E	DGS-8606E	DGS-8610E
Switch Functionality		Layer 3	Layer 3	Layer 3
Chassis Module Slots		3	6	10
Control Module Slots		1 CM + 1 combo CM/service + 1 service	2	2
Line Card Slots		2 (1 CM/service slot)	4	8
Maximum Ports	GE	120	192	384
	10G	40	64	128
	40G	8	16	32
Power Supply		3 power slots, AC and DC power modules	3 power slots, AC and DC power modules	3 power slots, AC and DC power modules
Scalability	MAC address table size	32k	32k	32k
	Stacking/VSS	✓	✓	✓
	Stacking/VSS bandwidth	20G/640G		
Environmental	Fan	Hot-swappable fan tray		
	Operating temperature	0°C to 40°C		
	Operating humidity	10%-90% non-condensing		
Management		Console/Telnet/SSH/SNMP		
Network Resilience	Spanning tree	✓		
	Link aggregation (LACP)	✓		
	VRRP v2/v3	✓		
QoS		✓		
Security	IEEE 802.1Q VLANs	4K		
	RADIUS / TACACS+	✓		
	SSH	✓		
	IEEE 802.1X	✓		
	DoS protection	✓		
	DHCP snooping	✓		
Routing	Static routes v4 / v6	✓		
	RIP / RIPng	✓		
	OSPFv2 / v3	✓		
	VRF Lite	✓		
	Policy-based routing	✓		
	BGP4 / BGP4+	✓		
Multicasting	IGMPv1 / v2 / v3	✓		
	MLDv1 / v2	✓		
	PIMv4 / PIMv6	✓		
	PIM-SSM	✓		



Core Switches

Seamless Switching, Limitless Possibilities

Advanced Routing (BGP / IS-IS / VRF-Lite)

MPLS Routing

Advanced VLAN

IMPB Access Control

Physical Stacking

sFlow Monitoring

ERPS Recovery

Advanced PSU Failover

A core switch serves as the central point for managing and directing network traffic within an organization or a large network environment. It allows administrators to configure and control how data flows over high-performance links such as 10, 25 or 100 Gbps.

Core switches provide non-blocking performance across all ports, ensuring seamless data flow. They support next-generation Ethernet speeds to meet high-bandwidth demands while offering a comprehensive suite of routing protocols. Designed for high availability, they deliver ultra-low latency through advanced hardware and software features.

Explore the Possibilities

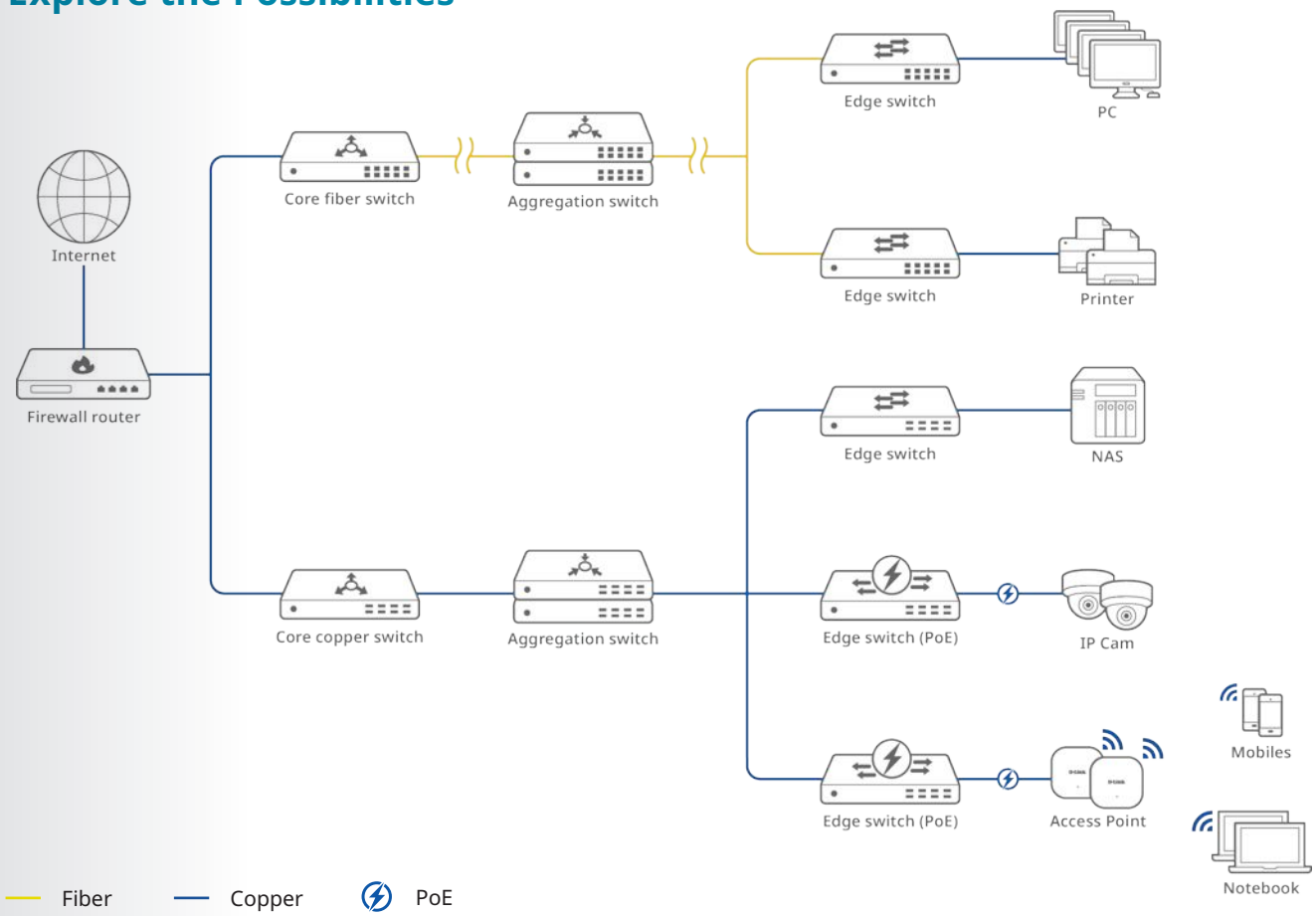

Copper Switches

- 1 / 10G speeds
- Continuous network reliability
- Suitable for large networks

Series	Model	Description
DGS-3630	DGS-3630-28TC	20 Ports 1G + 4 Ports 1G Combo + 4 Ports 10G SFP+ Managed Switch
	DGS-3630-52TC	44 Ports 1G + 4 Ports 1G Combo + 4 Ports 10G SFP+ Managed Switch
DXS-3410	DXS-3410-32XY	24 Ports 10G + 4 Ports 10G SFP+ + 4 Ports 10/25G SFP28 Managed Switch
DXS-3610	DXS-3610-54T	48 Ports 10G + 6 x 40G QSFP+ / 100G QSFP28 Managed Switch

Copper PoE Switches

- PoE budget up to 740W with RPS
- 6kV surge protection on all PoE ports
- High-bandwidth stacking, up to 9 units

Series	Model	Description
DGS-3630	DGS-3630-28PC	20 Ports 1G PoE+ + 4 Ports 1G Combo PoE+ + 4 Ports 10G SFP+ Managed Switch, 370W
	DGS-3630-52PC	44 Ports 1G PoE+ + 4 Ports 1G Combo PoE+ + 4 Ports 10G SFP+ Managed Switch, 370W

Fiber Switches

- 10G / 25G / 100G high speed capability
- Long-distance data transfer
- Selected optical fiber transceivers

Series	Model	Description
DGS-3630	DGS-3630-28SC	20 Ports 1G SFP + 4 Ports 1G Combo + 4 Ports 10G SFP+ Managed Switch
DXS-3410	DXS-3410-32SY	28 Ports 10G SFP+ + 4 Ports 10/25G SFP28 Managed Switch
DXS-F3500	DXS-F3500-32S	16 Ports 10G SFP+ + 8 Ports 25G SFP28 + 4 Ports 100G QSFP28 Managed Switch
	DXS-F3500-64S	48 Ports 10G SFP+ + 2 Ports 40G QSFP+ + 4 Ports 100G QSFP28 Managed Switch
DXS-3610	DXS-3610-54S	48 Ports 10G SFP+ + 6 x 40G QSFP+ / 100G QSFP28 Managed Switch

DGS-3630 Series

1G Layer 3 Stackable Managed

Physical stacking up to 9 units
Stacking bandwidth up to 80 Gbps



Advanced Routing (BGP / IS-IS / VRF-Lite)

ISM VLAN

Physical Stacking

MPLS Routing

PoE Budget up to 740W

Advanced Hardware

Redundant Power Supply (RPS)
Real Time Clock (RTC)
Dying gasp for 10G SFP+ ports
6kV surge protection

Management

Nuclias Unity
Nuclias Network Controller
Command Line Interface (CLI)
Web-based GUI
IEEE 802.3ah, 802.1ag, ITU-T Y.1731 OAM

L3

Routing Protocols
RIPv1 / 2 / ng
BGPv4 / v4+, OSPFv2 / v3
BFD
IS-ISv4 / v6
DVMRP, IGMPv3, VRRP
PIM-SM/DM, PIM SDM
MPLS, PBR
Static route
Default route

L2

Features / Security
Multi-chassis Link Aggregation Group (MLAG)
ERPS
L2 protocol tunneling
IGMP snooping v3 / MLD snooping v2 / PIM snooping
IP source guard, Dynamic ARP Inspection (DAI), ARP
Spoofing prevention
Q-in-Q, selective Q-in-Q

Copper Switches



DGS-3630-28TC

20 x 1G + 4 x 1G Combo / 4 x 10G SFP+



DGS-3630-52TC

44 x 1G + 4 x 1G Combo / 4 x 10G SFP+

Copper PoE Switches



DGS-3630-28PC

20 x 1G PoE + 4 x 1G Combo PoE / 4 x 10G SFP+, 370W



DGS-3630-52PC

44 x 1G PoE + 4 x 1G Combo PoE / 4 x 10G SFP+, 370W

Fiber Switch



DGS-3630-28SC

20 x 1G SFP + 4 x 1G Combo / 4 x 10G SFP+

Core Switches / DGS-3630 Series

Model	DGS-3630-28TC	DGS-3630-52TC	DGS-3630-28SC	DGS-3630-28PC	DGS-3630-52PC
Product Image					
Hardware					
Number of 1G Ports	20	44		20	44
Number of 1G Combo Ports	4	4	4	4	4
Number of 1G SFP Ports			20		
Number of 10G Ports	4	4	4		
Number of 10G Combo Ports					
Number of 10G SFP+ Ports				4	4
Number of 25G SFP28 Ports					
Number of 100G QSFP28 Ports					
Switching Capacity	128 Gbps	176 Gbps	128 Gbps	128 Gbps	176 Gbps
MAC Address	Up to 68K	Up to 68K	Up to 68K	Up to 68K	Up to 68K
PoE Standards	-	-	-	IEEE 802.3af / at	IEEE 802.3af / at
PoE Power Budget	-	-	-	370W (740W with RPS)	370W (740W with RPS)
PoE Capable Ports	-	-	-	Ports 1-24, up to 30W	Ports 1-48, up to 30W
PD-ALive	-	-	-	✓	✓
Power Supply Type	Internal	Internal	Internal	Internal	Internal
Redundant Power Supply				RPS	RPS
Fan	2 x Smart Fans	2 x Smart Fans	2 x Smart Fans	4 x Smart Fans	4 x Smart Fans
Physical Stacking (Device / Max Bandwidth)	9 / 80G	9 / 80G	9 / 80G	9 / 80G	9 / 80G
Switch Resource Management	IP / LAN / L2 VPN modes	IP / LAN / L2 VPN modes	IP / LAN / VPN modes	IP / LAN / L2 VPN modes	IP / LAN / L2 VPN modes
Surge Protection	6 kV	6 kV	6 kV	6kV	6kV
Dimension	441 x 259.8 x 44 mm	441 x 259.8 x 44 mm	441 x 259.8 x 44 mm	441 x 380 x 44 mm	441 x 380 x 44 mm
D-Link Green, 802.3az EEE	✓	✓	✓	✓	✓
Management Port	✓	✓	✓	✓	✓
Console Port (RJ-45)	✓	✓	✓	✓	✓
USB Storage Port	✓	✓	✓	✓	✓
L2					
Virtual Stacking (Device)	32	32	32	32	32
Spanning Tree	STP, RSTP, MSTP	STP, RSTP, MSTP	STP, RSTP, MSTP	STP, RSTP, MSTP	STP, RSTP, MSTP
G.8032 ERPS	ERPSv2	ERPSv2	ERPSv2	ERPSv2	ERPSv2
Link Aggregation	802.3ad, 802.1AX	802.3ad, 802.1AX	802.3ad, 802.1AX	802.3ad, 802.1AX	802.3ad, 802.1AX
IGMP Snooping	✓	✓	✓	✓	✓
VxLAN					
VLAN					
VLAN Group	4K	4K	4K	4K	4K
Protocol-Based VLAN	✓	✓	✓	✓	✓
Subnet-Based VLAN					
MAC VLAN	✓	✓	✓	✓	✓
GVRP	✓	✓	✓	✓	✓
VLAN Translation	✓	✓	✓	✓	✓
Private VLAN	✓	✓	✓	✓	✓
Asymmetric VLAN	✓	✓	✓	✓	✓
Voice VLAN	✓	✓	✓	✓	✓
Surveillance VLAN	ONVIF	ONVIF	ONVIF	ONVIF	ONVIF
ISM VLAN	✓	✓	✓	✓	✓
Double VLAN (Q-in-Q)	✓	✓	✓	✓	✓
Selective Q-in-Q	✓	✓	✓	✓	✓

Model	DGS-3630-28TC	DGS-3630-52TC	DGS-3630-28SC	DGS-3630-28PC	DGS-3630-52PC
Product Image					
Data Center / SDN					
MC-LAG	✓	✓	✓	✓	✓
ONIE					
OpenFlow					
Priority-Based Flow Control (PFC)	✓	✓	✓	✓	✓
L3					
IP Interfaces	256	256	256	256	256
IPv4 / IPv6 Routing Table	16K	16K	16K	16K	16K
IPv4 / IPv6 Forwarding Table	32K	32K	32K	32K	32K
Static Route for IPv4 / IPv6	512 / 256	512 / 256	512 / 256	512 / 256	512 / 256
PIM-SM / PIM-DM	✓	✓	✓	✓	✓
DVMRP v3	✓	✓	✓	✓	✓
RIP v1 / v2, RIPng	✓	✓	✓	✓	✓
OSPF v2 / v3	✓	✓	✓	✓	✓
VRRP v2 / v3	✓	✓	✓	✓	✓
BGP4 / BGP4+	✓	✓	✓	✓	✓
MPLS / VPLS	✓	✓	✓	✓	✓
IS-IS for IPv4 / IPv6	✓	✓	✓	✓	✓
Policy-Based Route (PBR)	✓	✓	✓	✓	✓
Bidirectional Forwarding Detection (BFD)	✓	✓	✓	✓	✓
ACL					
ACL Entry (Ingress / Egress)	Ingress / Egress	Ingress / Egress	Ingress / Egress	Ingress / Egress	Ingress / Egress
VLAN-Based ACL	✓	✓	✓	✓	✓
Time-Based ACL	✓	✓	✓	✓	✓
Security					
SSH	✓	✓	✓	✓	✓
TLS / SSL Support	✓	✓	✓	✓	✓
IP-MAC-Port Binding (IMPB)	✓	✓	✓	✓	✓
URPF	✓	✓	✓	✓	✓
ARP Spoofing Prevention	✓	✓	✓	✓	✓
Broadcast / Multicast / Unicast Storm Control	✓	✓	✓	✓	✓
AAA					
802.1X Access Control	✓	✓	✓	✓	✓
RADIUS	✓	✓	✓	✓	✓
TACACS+	✓	✓	✓	✓	✓
Management					
SNMP	v1 / v2c / v3	v1 / v2c / v3	v1 / v2c / v3	v1 / v2c / v3	v1 / v2c / v3
RMON v1 / v2	v1 / v2	v1 / v2	v1 / v2	v1 / v2	v1 / v2
sFlow	✓	✓	✓	✓	✓
OAM (802.3ah, 802.1ag, ITU-T Y.1731)	✓	✓	✓	✓	✓
ZTP					
Command Line Interface (CLI)	Full	Full	Full	Full	Full
Web-Based GUI	✓	✓	✓	✓	✓

Core Switches

DXS-3410 Series

10G Layer 3 Stackable Managed

Physical stacking up to 9 units
Stacking bandwidth up to 200 Gbps



L3 Routing
RIP / OSPF / VRRP

ERPS
Recovery

Physical
Stacking

Switching Capacity up to 760 Gbps

Advanced Hardware

Redundant Power Supply (RPS)
Real Time Clock (RTC)
Dying gasp
10G downlinks and 25G uplinks

Management

Nuclias Unity
Nuclias Network Controller
Command Line Interface (CLI)
Web-based GUI
IEEE 802.3ah, 802.1ag, ITU-T Y.1731 OAM

L3

Routing Protocols
RIPv1 / 2 / ng
OSPFv2 / v3
DVMRP, IGMPv3, VRRP
PBR
Static route
Default route

L2

Features / Security
Multi-chassis Link Aggregation Group (MLAG)
ERPS
L2 protocol tunneling
IGMP snooping v3 / MLD snooping v2 / PIM snooping
IP source guard, Dynamic ARP Inspection
(DAI), ARP Spoofing prevention
Q-in-Q, selective Q-in-Q

Copper Switch



DXS-3410-32XY

24 x 10G + 4 x 10G SFP+ / 4 x 10/25G SFP28

Fiber Switch



DXS-3410-32SY

28 x 10G SFP+ / 4 x 10/25G SFP28

Core Switches / DXS-3410 Series

Model	DXS-3410-32XY	DXS-3410-32SY
Product Image		
Hardware		
Number of 1G Ports		
Number of 1G Combo Ports		
Number of 1G SFP Ports		
Number of 10G Ports	24	
Number of 10G Combo Ports		
Number of 10G SFP+ Ports	4	28
Number of 25G SFP28 Ports	4	4
Number of 100G QSFP28 Ports		
Switching Capacity	760 Gbps	760 Gbps
MAC Address	32K	32K
PoE Standards	-	-
PoE Power Budget	-	-
PoE Capable Ports	-	-
PD-ALive	-	-
Power Supply Type	Internal	Internal
Redundant Power Supply	RPS	RPS
Fan	3 x Smart Fans	3 x Smart Fans
Physical Stacking (Device / Max Bandwidth)	9 / 200G	9 / 200G
Switch Resource Management		
Surge Protection		
Dimension	441.0 x 249.7 x 44.0 mm	441.0 x 249.7 x 44.0 mm
D-Link Green, 802.3az EEE	✓	✓
Management Port	✓	✓
Console Port (RJ-45)	✓	✓
USB Storage Port	✓	✓
L2		
Virtual Stacking (Device)	32	32
Spanning Tree	STP, RSTP, MSTP	STP, RSTP, MSTP
G.8032 ERPS	ERPSv2	ERPSv2
Link Aggregation	802.3ad, 802.1AX	802.3ad, 802.1AX
IGMP Snooping	✓	✓
VxLAN		
VLAN		
VLAN Group	4K	4K
Protocol-Based VLAN	✓	✓
Subnet-Based VLAN		
MAC VLAN	✓	✓
GVRP	✓	✓
VLAN Translation	✓	✓
Private VLAN	✓	✓
Asymmetric VLAN	✓	✓
Voice VLAN	✓	✓
Surveillance VLAN	ONVIF	ONVIF
ISM VLAN	✓	✓
Double VLAN (Q-in-Q)	✓	✓
Selective Q-in-Q	✓	✓

Model	DXS-3410-32XY	DXS-3410-32SY
Product Image		
Data Center / SDN		
MC-LAG		
ONIE		
OpenFlow		
Priority-Based Flow Control (PFC)	ü	ü
L3		
IP Interfaces	256	256
IPv4 / IPv6 Routing Table	12K	12K
IPv4 / IPv6 Forwarding Table	16K	16K
Static Route for IPv4 / IPv6	256 / 128	256 / 128
PIM-SM / PIM-DM	✓	✓
DVMRP v3	✓	✓
RIP v1 / v2, RIPng	✓	✓
OSPF v2 / v3	✓	✓
VRRP v2 / v3	✓	✓
BGP4 / BGP4+		
MPLS / VPLS		
IS-IS for IPv4 / IPv6	✓	✓
Policy-Based Route (PBR)	✓	✓
Bidirectional Forwarding Detection (BFD)		
ACL		
ACL Entry (Ingress / Egress)	Ingress / Egress	Ingress / Egress
VLAN-Based ACL	✓	✓
Time-Based ACL	✓	✓
Security		
SSH	✓	✓
TLS / SSL Support	✓	✓
IP-MAC-Port Binding (IMPB)	✓	✓
URPF	✓	✓
ARP Spoofing Prevention	✓	✓
Broadcast / Multicast / Unicast Storm Control	✓	✓
AAA		
802.1X Access Control	✓	✓
RADIUS	✓	✓
TACACS+	✓	✓
Management		
SNMP	v1 / v2c / v3	v1 / v2c / v3
RMON v1 / v2	v1	v1
sFlow	✓	✓
OAM (802.3ah, 802.1ag, ITU-T Y.1731)	✓	✓
ZTP	✓	✓
Command Line Interface (CLI)	Full	Full
Web-Based GUI	✓	✓

DXS-F3500 Series

10G Layer 3 Stackable Managed

Virtual stacking (VSU) up to 4 units



Advanced Routing (BGP / ISIS)

ERPS Recovery

Virtual Stacking (VSU)

Switching Capacity up to 1.92 Tbps

Advanced Hardware

Redundant Power Supply (RPS)
Real Time Clock (RTC)
10G downlinks and 40G/100G uplinks

L3

Routing Protocols
RIPv1 / 2 / ng
OSPFv2 / v3
BGPv4/v4+
IS-IS/v6
IGMPv3, VRRP
PBR
Static route
Default route
BFD

Management

Command Line Interface (CLI)
Web-based GUI
IEEE 802.3ah, 802.1ag

L2

Features / Security
ERPS
L2 protocol tunneling
IGMP snooping v3 / MLD snooping v2 / PIM snooping
IP source guard, Dynamic ARP Inspection
(DAI), ARP Spoofing prevention
Q-in-Q, selective Q-in-Q

Fiber Switches



DXS-F3500-32S

16 x 10G SFP+ / 8 x 25G SFP28 / 4 x 100G QSFP28

Fiber Switches



DXS-F3500-64S

48 x 10G SFP+ / 2 x 40G QSFP+ / 4 x 100G QSFP28

Core Switches / DXS-F3500 Series

Model	DXS-F3500-32S	DXS-F3500-64S
Product Image		
Hardware		
Number of 1G Ports	-	-
Number of 1G Combo Ports	-	-
Number of 1G SFP Ports	-	-
Number of 10G Ports	-	-
Number of 10G Combo Ports	-	-
Number of 10G SFP+ Ports	16	48
Number of 25G SFP28 Ports	8	-
Number of 40G QSFP+ Ports	-	2
Number of 100G QSFP28 Ports	4	4
Switching Capacity	1.52 Tbps	1.92 Tbps
MAC Address	114K	64K
PoE Standards	-	-
PoE Power Budget	-	-
PoE Capable Ports	-	-
PD-ALive	-	-
Power Supply Type	Internal	Internal
Redundant Power Supply	RPS	RPS
Fan	4 x Smart Fans	4 x Smart Fans
VSU via MCT (Devices)	Up to 4	Up to 4
Switch Resource Management	-	-
Surge Protection	-	-
Dimension	442 x 280 x 44.6 mm	442.5 x 404 x 44 mm
D-Link Green, 802.3az EEE	-	-
Management Port	✓	✓
Console Port (RJ-45)	✓	✓
USB Storage Port	✓	✓
L2		
Virtual Stacking (Device)	Up to 4	Up to 4
Spanning Tree	STP, RSTP, MSTP	STP, RSTP, MSTP
G.8032 ERPS	ERPSv2	ERPSv2
Link Aggregation	802.3ad, 802.1AX	802.3ad, 802.1AX
IGMP Snooping	✓	✓
VxLAN	-	-
VLAN		
VLAN Group	4K	4K
IEEE 802.1Q VLAN	✓	✓

Model	DXS-F3500-32S	DXS-F3500-64S
Product Image		
Double VLAN (Q-in-Q)	✓	✓
Selective Q-in-Q	✓	✓
Data Center / SDN		
MC-LAG	-	-
ONIE	-	-
OpenFlow	-	-
Priority-Based Flow Control (PFC)	✓	✓
L3		
IP Interfaces	1024	256
IPv4 / IPv6 Routing Table	IPv4 16K / IPv6 4K	16K/4K
IPv4 / IPv6 Forwarding Table	4K/2K	16K/8K
Static Route for IPv4 / IPv6	16K/8K	16K/8K
PIM-SM / PIM-DM	PIM-SM	✓
DVMRP v3	-	-
RIP v1 / v2, RIPng	✓	✓
OSPF v2 / v3	✓	✓
VRRP v2 / v3	✓	✓
BGP4 / BGP4+	✓	✓
MPLS / VPLS	-	-
IS-IS for IPv4 / IPv6	✓	✓
Policy-Based Route (PBR)	✓	✓
Bidirectional Forwarding Detection (BFD)	✓	✓
ACL		
ACL Entry (Ingress / Egress)	Ingress / Egress	Ingress / Egress
VLAN-Based ACL	✓	✓
Time-Based ACL	✓	✓
Security		
SSH	✓	✓
TLS / SSL Support	✓	✓
IP-MAC-Port Binding (IMPB)	✓	✓
URPF	✓	✓
ARP Spoofing Prevention	✓	✓
Broadcast / Multicast / Unicast Storm Control	✓	✓
AAA		
802.1X Access Control	✓	✓
RADIUS	✓	✓
TACACS+	✓	✓
Management		
SNMP	v1 / v2c / v3	v1 / v2c / v3
RMON v1 / v2	v1 / v2	v1 / v2
sFlow	-	-
OAM (802.3ah, 802.1ag, ITU-T Y.1731)	802.3ah	802.3ah
ZTP	-	-
Command Line Interface (CLI)	Full	Full
Web-Based GUI	✓	✓

DXS-3610 Series

10G Layer 3 Stackable Managed

Physical stacking up to 12 units
Stacking bandwidth up to 1200 Gbps



Advanced Routing (BGP / IS-IS / VRF-Lite)

ISM VLAN

Physical Stacking

Hot Pluggable

Advanced Hardware

AC / DC hot-swappable modules (1 + 1 power redundancy)
Real Time Clock (RTC)
N+1 modular hot-swappable fans
Dying gasp for 100G QSFP28 ports

Management

Nuclias Unity
Nuclias Network Controller
Command Line Interface (CLI)
Web-based GUI
IEEE 802.3ah, 802.1ag, ITU-T Y.1731 OAM
ONIE

L3

Routing Protocols
PBR
RIPv1 / 2 / ng
OSPFv2 / v3
BGP4 / BGP4+
IS-IS for IPv4 / IPv6
PIM-SM / DM, PIM SDM,
DVMRP, IGMPv3, VRRP
Static route
Default route
BFD
MPLS

L2

Features / Security
Multi-Chassis Link Aggregation Group (MLAG),
802.1AX link aggregation
STP, RSTP, MSTP
ERPS
ARP / BPDU / DoS spoofing prevention
Q-in-Q, selective Q-in-Q

Copper Switch



DXS-3610-54T

48 x 10G / 6 x 40G QSFP+ / 100G QSFP28

Fiber Switch



DXS-3610-54S

48 x 10G SFP+ / 6 x 40G QSFP+ / 100G QSFP28

Core Switches / DXS-3610 Series

Model	DXS-3610-54T	DXS-3610-54S
Product Image		
Hardware		
Number of 1G Ports		
Number of 1G Combo Ports		
Number of 1G SFP Ports		
Number of 10G Ports	48	
Number of 10G Combo Ports		
Number of 10G SFP+ Ports		48
Number of 40G SFP28 Ports	6 x 40G QSFP+ / 100G QSFP28	6 x 40G QSFP+ / 100G QSFP28
Number of 100G QSFP28 Ports	6	6
Switching Capacity	2.16 Tbps	2.16 Tbps
MAC Address	Up to 288K	Up to 288K
PoE Standards	-	-
PoE Power Budget	-	-
PoE Capable Ports	-	-
PD-ALive	-	-
Power Supply Type	Internal	Internal
Redundant Power Supply	CRPS	CRPS
Fan	5 x Hot-swappable fan	5 x Hot-swappable fan
Physical Stacking (Device / Max Bandwidth)	12 / 1200G	12 / 1200G
Switch Resource Management	IP / LAN / L2 VPN modes	IP / LAN / L2 VPN modes
Surge Protection		
Dimension	441.0 x 487.4 x 43.5 mm	441.0 x 487.4 x 43.5 mm
D-Link Green, 802.3az EEE	✓	✓
Management Port	✓	✓
Console Port (RJ-45)	✓	✓
USB Storage Port	✓	✓
L2		
Virtual Stacking (Device)	32	32
Spanning Tree	STP, RSTP, MSTP	STP, RSTP, MSTP
G.8032 ERPS	ERPSv2	ERPSv2
Link Aggregation	802.3ad	802.3ad
IGMP Snooping	✓	✓
VxLAN		
VLAN		
VLAN Group	4K	4K
Protocol-Based VLAN	✓	✓
Subnet-Based VLAN		
MAC VLAN	✓	✓
GVRP	✓	✓
VLAN Translation	✓	✓
Private VLAN	✓	✓
Asymmetric VLAN	✓	✓
Voice VLAN	✓	✓
Surveillance VLAN	ONVIF	ONVIF
ISM VLAN	✓	✓
Double VLAN (Q-in-Q)	✓	✓
Selective Q-in-Q	✓	✓

Model	DXS-3610-54T	DXS-3610-54S
Product Image		
Data Center / SDN		
MC-LAG	✓	✓
ONIE	✓	✓
OpenFlow	v1.3	v1.3
Priority-Based Flow Control (PFC)	✓	✓
L3		
IP Interfaces	256	256
IPv4 / IPv6 Routing Table	32K / 16K	32K / 16K
IPv4 / IPv6 Forwarding Table	144K / 72K	144K / 72K
Static Route for IPv4 / IPv6	1K / 512	1K / 512
PIM-SM / PIM-DM*	✓	✓
DVMRP v3*	✓	✓
RIP v1 / v2, RIPng	✓	✓
OSPF v2 / v3	✓	✓
VRRP v2 / v3	✓	✓
BGP4 / BGP4+*	✓	✓
MPLS / BGP / IS-IS*	✓	✓
IS-IS for IPv4 / IPv6*	✓	✓
Policy-Based Route (PBR)	✓	✓
Bidirectional Forwarding Detection (BFD)	✓	✓
ACL		
ACL Entry (Ingress / Egress)	Ingress / Egress	Ingress / Egress
VLAN-Based ACL	✓	✓
Time-Based ACL	✓	✓
Security		
SSH	✓	✓
TLS / SSL Support	✓	✓
IP-MAC-Port Binding (IMPB)	✓	✓
URPF	✓	✓
ARP Spoofing Prevention	✓	✓
Broadcast / Multicast / Unicast Storm Control	✓	✓
AAA		
802.1X Access Control	✓	✓
RADIUS	✓	✓
TACACS+	✓	✓
Management		
SNMP	v1 / v2c / v3	v1 / v2c / v3
RMON v1 / v2	v1 / v2	v1 / v2
sFlow	✓	✓
OAM (802.3ah, 802.1ag, ITU-T Y.1731)	✓	✓
ZTP	-	-
Command Line Interface (CLI)	Full	Full
Web-Based GUI	✓	✓

* Requires the Enhanced Image (EI) license: DXS-3610-54T-SE-LIC / DXS-3610-54S-SE-LIC.

Aggregation Switches

Streamlined Aggregation, Maximum Efficiency



Dynamic Routing

IGMP Snooping

Centralized Management

Physical Stacking

Fast Recovery

Advanced VLAN

Monitor and Manage

ACL Protection

Aggregation switches consolidate data traffic from multiple edge switches, enhancing performance, scalability, and security. They simplify network design, reduce core switch connections, lower latency, and improve traffic management. Multiple switches can form a single physical stack, simplifying monitoring and control. This centralization enhances security and enables efficient policy implementation, contributing to a robust, scalable network infrastructure.

Explore the Possibilities

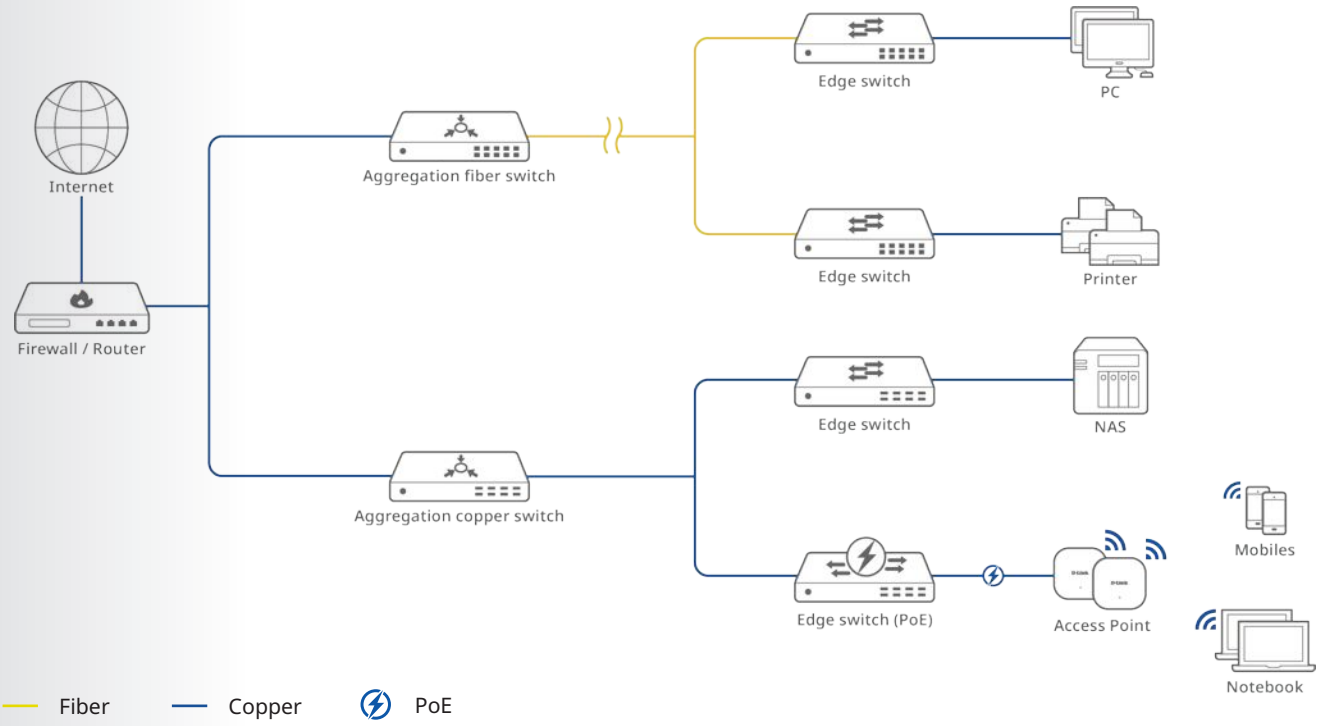

Copper Switches

- Connect edge switches easily
- Extend network reach
- RPS ensures high availability

Series	Model	Description
DGS-3130	DGS-3130-30TS	24 Ports 1G + 2 Ports 10G + 4 Ports 10G SFP+ Managed Switch
	DGS-3130-54TS	48 Ports 1G + 2 Ports 10G + 4 Ports 10G SFP+ Managed Switch
DMS-3130	DMS-3130-30TS	24 Ports 2.5G + 2 Ports 10G + 4 Ports 25G SFP28 Managed Switch
DXS-3130	DXS-3130-28	24 Ports 10G + 4 Ports 25G SFP28 Managed Switch

Copper PoE Switches

- High speed PoE device connection
- High-capacity uplinks
- Advanced management and features

Series	Model	Description
DGS-F1500	DGS-F1500-28MP	24 Ports 1G PoE+ + 4 Ports 10G SFP+ Managed Switch, 400W
	DGS-F1500-52MP	48 Ports 1G PoE+ + 6 Ports 10G SFP+ Managed Switch, 780W
DGS-3130	DGS-3130-30PS	24 Ports 1G PoE+ + 2 Ports 10G + 4 Ports 10G SFP+ Managed Switch, 370W
	DGS-3130-54PS	48 Ports 1G PoE+ + 2 Ports 10G + 4 Ports 10G SFP+ Managed Switch, 370W
DMS-3130	DMS-3130-30PS	16 Ports 2.5G PoE+ + 8 Ports 5G PoE++ + 2 Ports 10G + 4 Ports 25G SFP28 Managed Switch, 740W
DXS-3130	DXS-3130-28P	24 Ports 10G PoE++ + 4 Ports 25G SFP28 Managed Switch, 790W

Fiber Switches

- Long-distance data transfer
- Reliable connectivity
- High bandwidth transmission

Series	Model	Description
DGS-F1500	DGS-F1500-28XS	16 Ports 1G SFP + 8 Ports 1G Combo + 4 Ports 10G SFP+ Managed Switch
DGS-3130	DGS-3130-30S	24 Ports 1G SFP + 2 Ports 10G + 4 Ports 10G SFP+ Managed Switch
	DGS-3130-54S	48 Ports 1G SFP + 2 Ports 10G + 4 Ports 10G SFP+ Managed Switch
DXS-3130	DXS-3130-32S	28 Ports 10G SFP+ + 4 Ports 25G SFP28 Managed Switch

DGS-F1500 Series

Lite Layer 3 Managed

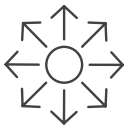

L3 Routing RIP/OSPF

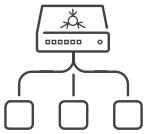

Link Aggregation



SNMP Management



Compliant with IEEE 802.1Q VLAN



PoE Budget up to 780W

Advanced Hardware

Up to 6kV surge protection

Management

Command Line Interface (CLI)

Web-based GUI

L3

Routing Protocols

PBR

RIPv1 / 2

OSPFv2

Static route

Default route

L2

Features / Security

802.1AX link aggregation

STP, RSTP, MSTP

ERPS

Dynamic ARP Inspection (DAI)

ARP / BPDU / DoS spoofing prevention

Q-in-Q, selective Q-in-Q

Fiber Switches



DGS-F1500-28XS

16 x 1G SFP + 8 x 1G Combo / 4 x 10G SFP+

Copper PoE Switches



DGS-F1500-28MP

24 x 1G PoE / 4 x 10G SFP+, 400W

Copper PoE Switches

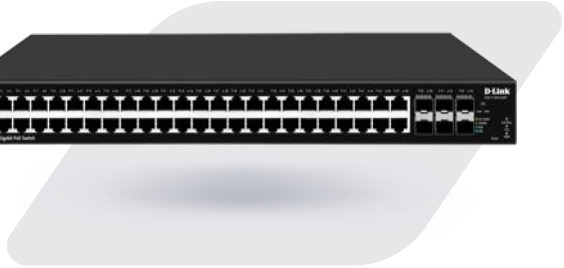

DGS-F1500-52MP

48 x 1G PoE / 6 x 10G SFP+, 780W

Aggregation Switches / DGS-F1500 Series

Model	DGS-F1500-28XS	DGS-F1500-28MP	DGS-F1500-52MP
Product Image			
Hardware			
Number of 1G Ports	-	24	48
Number of 1G SFP Ports	24 (8 Combo Ports)	-	-
Number of 2.5G Ports	-	-	-
Number of 5G Ports	-	-	-
Number of 10G Ports	-	-	-
Number of 10G Combo Ports	-	-	-
Number of 10G SFP+ Ports	4	4	6
Number of 25G SFP28 Ports	-	-	-
Number of 100G QSFP28 Ports	-	-	-
Switching Capacity	128 Gbps	128 Gbps	216 Gbps
MAC Address	16K	16K	32K
PoE Standards	-	IEEE 802.3af / at	IEEE 802.3af / at
PoE Power Budget	-	400W	780W
PoE Capable Ports	-	Ports 1-24, up to 30W	Ports 1-48, up to 30W
PD-ALive	✓	✓	✓
Perpetual PoE	-	-	-
Fast PoE	-	-	-
Power Supply Type	Internal	Internal	Internal
Redundant Power Supply	-	-	-
Fan	1 x Smart Fans	2 x Smart Fans	4 x Smart Fans
Physical Stacking (Device / Max Bandwidth)	-	-	-
Surge Protection	4kV	6kV	6kV
Dimension	440 x 205 x 44 mm	440 x 281 x 44 mm	440 x 346 x 44 mm
D-Link Green, 802.3az EEE	✓	✓	✓
Management Port	-	-	-
Console Port (RJ-45)	✓	✓	✓
USB Storage Port	-	✓	-
L2			
Virtual Stacking (Device)	-	-	-
Spanning Tree	STP, RSTP, MSTP	STP, RSTP, MSTP	STP, RSTP, MSTP
G.8032 ERPS	✓	-	-
Link Aggregation	802.3ad, 802.1AX	802.3ad, 802.1AX	802.3ad, 802.1AX
IGMP Snooping	✓	✓	✓
VxLAN	-	-	-
VLAN			
VLAN Group	4K	4K	4K
Protocol-Based VLAN	✓	✓	✓
Subnet-Based VLAN	-	-	-
MAC VLAN	✓	✓	✓
GVRP	✓	✓	✓
VLAN Translation	-	-	-
Private VLAN	-	-	-
Asymmetric VLAN	-	-	-
Voice VLAN	✓	✓	✓
Surveillance VLAN	-	-	-
ISM VLAN	-	-	-
Double VLAN (Q-in-Q)	✓	✓	✓
Selective Q-in-Q	-	-	-

Model	DGS-F1500-28XS	DGS-F1500-28MP	DGS-F1500-52MP
Product Image			
L3			
IP Interfaces	32	15	15
IPv4 / IPv6 Routing Table	512	512	1024
Static Route for IPv4 / IPv6	32	32	32
PIM-SM / PIM-DM	-	-	-
DVMRP v3	-	-	-
RIP v1 / v2	✓	✓	✓
RIPng	-	-	-
OSPF v2	✓	✓	✓
OSPF v3	-	-	-
VRRP v2 / v3	-	-	-
Policy-Based Route (PBR)	-	-	-
QoS			
802.1p QoS	✓	✓	✓
Number of Queues per Port	8	8	8
Bandwidth Control (Min. Granularity)	✓(16k)	✓(16k)	✓(16k)
Class Mapping (trTCM / srTCM)	-	-	-
ACL			
ACL Entry (Ingress / Egress)	Ingress / Egress	Ingress / Egress	Ingress / Egress
VLAN-Based ACL	✓	✓	✓
Time-Based ACL	-	-	-
Security			
SSH	✓	✓	✓
TLS / SSL Support	✓	✓	✓
IP-MAC-Port Binding (IMPB)	✓	✓	✓
ARP Spoofing Prevention	✓	✓	✓
BPDU Attack Protection	✓	✓	✓
Broadcast / Multicast / Unicast Storm Control	✓	✓	✓
AAA			
802.1X Access Control	✓	✓	✓
RADIUS	✓	✓	✓
TACACS+	✓	✓	✓
Management			
SNMP	v1 / v2c / v3	v1 / v2c / v3	v1 / v2c / v3
RMON v1 / v2	✓	✓	✓
sFlow	-	-	-
OAM (802.3ah, 802.1ag, ITU-T Y.1731)	-	-	-
ZTP	-	-	-
Command Line Interface (CLI)	Full	Full	Full
Web-Based GUI	✓	✓	✓

DGS-3130 Series

1G Layer 3 Stackable Managed

Physical stacking up to 9 units
Stacking bandwidth up to 80 Gbps



L3 Routing
RIP/OSPF/VRRP

Link
Aggregation

Physical
Stacking

VLAN
Compliant with
IEEE 802.1Q VLAN

PoE Budget
up to 740W

Advanced Hardware

Redundant Power Supply (RPS)
Real Time Clock (RTC)
Dying gasp
6kV surge protection

Management

Nuclias Unity
Nuclias Network Controller
Command Line Interface (CLI)
Web-based GUI
IEEE 802.3ah, 802.1ag, ITU-T Y.1731 OAM

L3

Routing Protocols
PBR
RIPv1 / 2
OSPFv2
VRRP
PIM / SM, IGMPv1 / v2 / v3
Static route
Default route

L2

Features / Security
802.1AX link aggregation
STP, RSTP, MSTP
ERPS
Dynamic ARP Inspection (DAI)
ARP / BPDU / DoS spoofing prevention
Q-in-Q, selective Q-in-Q

Copper Switches



DGS-3130-30TS

24 x 1G / 2 x 10G + 4 x 10G SFP+



DGS-3130-54TS

48 x 1G / 2 x 10G + 4 x 10G SFP+

Copper PoE Switches



DGS-3130-30PS

24 x 1G PoE / 2 x 10G + 4 x 10G SFP+, 370W



DGS-3130-54PS

48 x 1G PoE / 2 x 10G + 4 x 10G SFP+, 370W

Fiber Switches



DGS-3130-30S

24 x 1G SFP / 2 x 10G + 4 x 10G SFP+



DGS-3130-54S

48 x 1G SFP / 2 x 10G + 4 x 10G SFP+

Aggregation Switches / DGS-3130 Series

Model	DGS-3130-30TS	DGS-3130-30PS	DGS-3130-30S	DGS-3130-54TS	DGS-3130-54S
Product Image					
Hardware					
Number of 1G Ports	24	24		48	
Number of 1G SFP Ports		-	24	-	48
Number of 2.5G Ports					
Number of 5G Ports					
Number of 10G Ports	2	2	2	2	2
Number of 10G Combo Ports		4	4	4	4
Number of 10G SFP+ Ports	4				
Number of 25G SFP28 Ports					
Number of 100G QSFP28 Ports					
Switching Capacity	168 Gbps	168 Gbps	168 Gbps	216 Gbps	216 Gbps
MAC Address	16 K	16 K	16 K	16 K	16 K
PoE Standards		IEEE 802.3af / at			
PoE Power Budget		370W (740W with RPS)			
PoE Capable Ports		Ports 1-24, up to 30W			
PD-ALive		✓			
Perpetual PoE		✓			
Fast PoE		✓			
Power Supply Type	Internal	Internal	Internal	Internal	Internal
Redundant Power Supply	RPS	RPS	RPS	RPS	RPS
Fan	1 x Smart Fan	3 x Smart Fans	3 x Smart Fans	2 x Smart Fans	4 x Smart Fans
Physical Stacking (Device / Max Bandwidth)	9 / 80G	9 / 80G	9 / 80G	6 / 80G	9 / 80G
Surge Protection	6kV	6kV	6kV	6kV	6kV
Dimension	440 x 250 x 44 mm	440 x 250 x 44 mm	440 x 250 x 44 mm	440 x 310 x 44 mm	440 x 430 x 44 mm
D-Link Green, 802.3az EEE	✓	✓	✓	✓	✓
Management Port	✓	✓	✓	✓	✓
Console Port (RJ-45)	✓	✓	✓	✓	✓
USB Storage Port	✓	✓	✓	✓	✓
L2					
Virtual Stacking (Device)	32	32	32	32	32
Spanning Tree	STP, RSTP, MSTP	STP, RSTP, MSTP	STP, RSTP, MSTP	STP, RSTP, MSTP	STP, RSTP, MSTP
G.8032 ERPS	ERPS	ERPS	ERPS	ERPS	ERPS
Link Aggregation	802.3ad, 802.1AX	802.3ad, 802.1AX	802.3ad, 802.1AX	802.3ad, 802.1AX	802.3ad, 802.1AX
IGMP Snooping	✓	✓	✓	✓	✓
VxLAN					
VLAN					
VLAN Group	4 K	4 K	4 K	4 K	4 K
Protocol-Based VLAN	✓	✓	✓	✓	✓
Subnet-Based VLAN					
MAC VLAN	✓	✓	✓	✓	✓
GVRP	✓	✓	✓	✓	✓
VLAN Translation	✓	✓	✓	✓	✓
Private VLAN	✓	✓	✓	✓	✓
Asymmetric VLAN	✓	✓	✓	✓	✓
Voice VLAN	✓	✓	✓	✓	✓
Surveillance VLAN	✓	✓	✓	✓	✓
ISM VLAN	✓	✓	✓	✓	✓
Double VLAN (Q-in-Q)	✓	✓	✓	✓	✓
Selective Q-in-Q	✓	✓	✓	✓	✓

Model	DGS-3130-30TS	DGS-3130-30PS	DGS-3130-30S	DGS-3130-54TS	DGS-3130-54S
Product Image					
L3					
IP Interfaces	128	128	128	128	128
IPv4 / IPv6 Routing Table	1024 / 1024	1024 / 1024	1024 / 1024	1024 / 1024	1024 / 1024
Static Route for IPv4 / IPv6	512 / 256	512 / 256	512 / 256	512 / 256	512 / 256
PIM-SM / PIM-DM	✓	✓	✓	✓	✓
DVMRP v3	✓	✓	✓	✓	✓
RIP v1 / v2, RIPng	✓	✓	✓	✓	✓
OSPF v2 / v3	✓	✓	✓	✓	✓
VRRP v2 / v3	✓	✓	✓	✓	✓
Policy-Based Route (PBR)	✓	✓	✓	✓	✓
QoS					
802.1p QoS	✓	✓	✓	✓	✓
Number of Queues per Port	8	8	8	8	8
Bandwidth Control (Min. Granularity)	8 Kbps	8 Kbps	8 Kbps	8 Kbps	8 Kbps
Class Mapping (trTCM / srTCM)	srTCM, trTCM	srTCM, trTCM	srTCM, trTCM	srTCM, trTCM	srTCM, trTCM
ACL					
ACL Entry (Ingress / Egress)	Ingress / Egress	Ingress / Egress	Ingress / Egress	Ingress / Egress	Ingress / Egress
VLAN-Based ACL	✓	✓	✓	✓	✓
Time-Based ACL	✓	✓	✓	✓	✓
Security					
SSH	✓	✓	✓	✓	✓
TLS / SSL Support	TLS, SSL	TLS, SSL	TLS, SSL	TLS, SSL	TLS, SSL
IP-MAC-Port Binding (IMPB)	✓	✓	✓	✓	✓
ARP Spoofing Prevention	✓	✓	✓	✓	✓
BPDU Attack Protection	✓	✓	✓	✓	✓
Broadcast / Multicast / Unicast Storm Control	✓	✓	✓	✓	✓
AAA					
802.1X Access Control	✓	✓	✓	✓	✓
RADIUS	✓	✓	✓	✓	✓
TACACS+	✓	✓	✓	✓	✓
Management					
SNMP	v1 / v2c / v3	v1 / v2c / v3	v1 / v2c / v3	v1 / v2c / v3	v1 / v2c / v3
RMON v1 / v2	v1 / v2	v1 / v2	v1 / v2	v1 / v2	v1 / v2
sFlow	✓	✓	✓	✓	✓
OAM (802.3ah, 802.1ag, ITU-T Y.1731)	✓	✓	✓	✓	✓
ZTP					
Command Line Interface (CLI)	Full	Full	Full	Full	Full
Web-Based GUI	✓	✓	✓	✓	✓

DMS-3130 Series

2.5G Layer 3 Stackable Managed

Physical stacking up to 9 units
Stacking bandwidth up to 200 Gbps



L3 Routing
RIP / OSPF / VRRP

10G / 25G
SFP28 Ports

Physical
Stacking

IGMP
Snooping

Up to 60W PoE++
(802.3bt)

Advanced Hardware

2.5G downlinks and 10G / 25G uplinks
Redundant Power Supply (RPS)
Real Time Clock (RTC)
Dying gasp
6kV surge protection

Management

Nuclias Unity
Nuclias Network Controller
Command Line Interface (CLI)
Web-based GUI
IEEE 802.3ah, 802.1ag, ITU-T Y.1731 OAM

L3

Routing Protocols
RIPv1 / 2, RIPng
OSPFv2 / v3
PBR
VRRP
PIM / SM, IGMPv1 / v2 / v3
IPv4 / IPv6 static route
Proxy ARP
Loopback interface
Gratuitous ARP
Default route
Static route

L2

Features / Security
802.1AX link aggregation
STP, RSTP, MSTP
ERPS
Dynamic ARP Inspection (DAI)
ARP / BPDU / DoS spoofing prevention
Q-in-Q, selective Q-in-Q

Copper Switches



DMS-3130-30TS

24 x 2.5G / 2 x 10G + 4 x 25G SFP28

Copper PoE Switches



DMS-3130-30PS

16 x 2.5G PoE + 8 x 5G PoE / 2 x 10G + 4 x 25G SFP28, 740W

Aggregation Switches / DMS-3130 Series

Model	DMS-3130-30TS	DMS-3130-30PS
Product Image		
Hardware		
Number of 1G Ports		
Number of 1G SFP Ports		
Number of 2.5G Ports	24	16
Number of 5G Ports	-	8
Number of 10G Ports	2	2
Number of 10G Combo Ports		
Number of 10G SFP+ Ports		
Number of 25G SFP28 Ports	4	4
Number of 100G QSFP28 Ports		
Switching Capacity	360 Gbps	400 Gbps
MAC Address	32 K	32 K
PoE Standards		IEEE 802.3af / at / bt
PoE Power Budget		740W (960W with RPS)
PoE Capable Ports		Ports 1-16, up to 30W, Ports 17-24, up to 60W
PD-ALive		✓
Perpetual PoE		✓
Fast PoE		✓
Power Supply Type	Internal	Hot-Swappable Internal
Redundant Power Supply	RPS	RPS
Fan	2 x Smart Fans	2 x Smart Fans
Physical Stacking (Device / Max Bandwidth)	9 / 200G	9 / 200G
Surge Protection	6kV	6kV
Dimension	440 x 250 x 44 mm	440 x 470 x 44 mm
D-Link Green, 802.3az EEE	✓	✓
Management Port	✓	✓
Console Port (RJ-45)	✓	✓
USB Storage Port	✓	✓
L2		
Virtual Stacking (Device)	32	32
Spanning Tree	STP, RSTP, MSTP	STP, RSTP, MSTP
G.8032 ERPS	ERPS	ERPS
Link Aggregation	802.3ad, 802.1AX	802.3ad, 802.1AX
IGMP Snooping	✓	✓
VxLAN		
VLAN		
VLAN Group	4K	4K
Protocol-Based VLAN	✓	✓
Subnet-Based VLAN		
MAC VLAN	✓	✓
GVRP	✓	✓
VLAN Translation	✓	✓
Private VLAN	✓	✓
Asymmetric VLAN	✓	✓
Voice VLAN	✓	✓
Surveillance VLAN	✓	✓
ISM VLAN	✓	✓

Double VLAN (Q-in-Q)	✓	✓
Selective Q-in-Q	✓	✓
Model	DMS-3130-30TS	DMS-3130-30PS
Product Image		
L3		
IP Interfaces	128	128
IPv4 / IPv6 Routing Table	1024 / 1024	1024 / 1024
Static Route for IPv4 / IPv6	512 / 256	512 / 256
PIM-SM / PIM-DM	✓	✓
DVMRP v3	✓	✓
RIP v1 / v2, RIPng	✓	✓
OSPF v2 / v3	✓	✓
VRRP v2 / v3	✓	✓
Policy-Based Route (PBR)	✓	✓
QoS		
802.1p QoS	✓	✓
Number of Queues per Port	8	8
Bandwidth Control (Min. Granularity)	8 Kbps	8 Kbps
Class Mapping (trTCM / srTCM)	srTCM, trTCM	srTCM, trTCM
ACL		
ACL Entry (Ingress / Egress)	Ingress / Egress	Ingress / Egress
VLAN-Based ACL	✓	✓
Time-Based ACL	✓	✓
Security		
SSH	✓	✓
TLS / SSL Support	TLS, SSL	TLS, SSL
IP-MAC-Port Binding (IMPB)	✓	✓
ARP Spoofing Prevention	✓	✓
BPDU Attack Protection	✓	✓
Broadcast / Multicast / Unicast Storm Control	✓	✓
AAA		
802.1X Access Control	✓	✓
RADIUS	✓	✓
TACACS+	✓	✓
Management		
SNMP	v1 / v2c / v3	v1 / v2c / v3
RMON v1 / v2	v1 / v2	v1 / v2
sFlow	✓	✓
OAM (802.3ah, 802.1ag, ITU-T Y.1731)	✓	✓
ZTP		
Command Line Interface (CLI)	Full	Full
Web-Based GUI	✓	✓

DXS-3130 Series

10G Layer 3 Stackable Managed

Physical stacking up to 9 units
Stacking bandwidth up to 200 Gbps



L3 Routing
RIP / OSPF / VRRP

ERPS
Recovery

Q-in-Q
VLAN
Segregation

Redundant
Power Supply

Up to 60W PoE++
(802.3bt)

Advanced Hardware

Physical stacking up to 9 units per stack
IEEE 802.3bt (60W) or 802.3af / at compliant
Dying gasp
ERPS
6kV surge protection
Redundant Power Supply (CRPS / RPS, model dependent)

Management

Nuclias Unity
Nuclias Network Controller
Command Line Interface (CLI)
Web-based GUI
IEEE 802.3ah, 802.1ag, ITU-T Y.1731 OAM

L3

Routing Protocols
RIPv1 / 2 / ng
OSPFv2 / v3
PBR
PIM / SM, IGMPv1 / v2 / v3
IPv4 / IPv6 static route
IPv4 ARP entries
IPv6 ND entries
Proxy ARP
Default route
IP interface
VRRP

L2

Features / Security
802.1AX / 802.3ad link aggregation
IGMP v1 / v2 / v3 snooping, MLD v1 / v2 snooping
Port security
SSL / SSH security
Access Control List (ACL)
802.1P quality of service
OAM 802.3ah, 802.1ag, Y.1731
Q-in-Q, selective Q-in-Q

Copper Switches



DXS-3130-28

24 x 10G / 4 x 25G SFP28

Copper PoE Switch



DXS-3130-28P

24 x 10G PoE / 4 x 25G SFP28, 790W

Fiber Switches



DXS-3130-32S

28 x 10G SFP+ / 4 x 25G SFP28

Aggregation Switches / DXS-3130 Series

Model	DXS-3130-28	DXS-3130-28P	DXS-3130-32S
Product Image			
Hardware			
Number of 1G Ports			
Number of 1G SFP Ports			
Number of 2.5G Ports			
Number of 5G Ports			
Number of 10G Ports	24	24	
Number of 10G Combo Ports			
Number of 10G SFP+ Ports			28
Number of 25G SFP28 Ports	4	4	4
Number of 100G QSFP28 Ports			
Switching Capacity	680 Gbps	680 Gbps	760 Gbps
MAC Address	32 K	32 K	32 K
PoE Standards		IEEE 802.3af / at / bt	
PoE Power Budget		790W (1440W with RPS)	
PoE Capable Ports		Ports 1-24, up to 60W	
PD-ALive		✓	
Perpetual PoE		✓	
Fast PoE		✓	
Power Supply Type	Internal	Hot-Swappable Internal	Internal
Redundant Power Supply	RPS	RPS	RPS
Fan	3 x Smart Fans	2 x Smart Fans	3 x Smart Fans
Physical Stacking (Device / Max Bandwidth)	9 / 200G	9 / 200G	9 / 200G
Surge Protection	6kV	6kV	6kV
Dimension	440 x 250 x 44 mm	440 x 250 x 44 mm	440 x 250 x 44 mm
D-Link Green, 802.3az EEE	✓	✓	✓
Management Port	✓	✓	✓
Console Port (RJ-45)	✓	✓	✓
USB Storage Port	✓	✓	✓
L2			
Virtual Stacking (Device)	32	32	32
Spanning Tree	STP, RSTP, MSTP	STP, RSTP, MSTP	STP, RSTP, MSTP
G.8032 ERPS	ERPS	ERPS	ERPS
Link Aggregation	802.3ad, 802.1AX	802.3ad, 802.1AX	802.3ad, 802.1AX
IGMP Snooping	✓	✓	✓
VxLAN			
VLAN			
VLAN Group	4 K	4 K	4 K
Protocol-Based VLAN	✓	✓	✓
Subnet-Based VLAN			
MAC VLAN	✓	✓	✓
GVRP	✓	✓	✓
VLAN Translation	✓	✓	✓
Private VLAN	✓	✓	✓
Asymmetric VLAN	✓	✓	✓
Voice VLAN	✓	✓	✓
Surveillance VLAN	✓	✓	✓
ISM VLAN	✓	✓	✓

Double VLAN (Q-in-Q)	✓	✓	✓
Selective Q-in-Q	✓	✓	✓
Model	DXS-3130-28	DXS-3130-28P	DXS-3130-32S
Product Image			
L3			
IP Interfaces	128	128	128
IPv4 / IPv6 Routing Table	1024 / 1024	1024 / 1024	1024 / 1024
Static Route for IPv4 / IPv6	512 / 256	512 / 256	512 / 256
PIM-SM / PIM-DM	✓	✓	✓
DVMRP v3	✓	✓	✓
RIP v1 / v2, RIPng	✓	✓	✓
OSPF v2 / v3	✓	✓	✓
VRRP v2 / v3	✓	✓	✓
Policy-Based Route (PBR)	✓	✓	✓
QoS			
802.1p QoS	✓	✓	✓
Number of Queues per Port	8	8	8
Bandwidth Control (Min. Granularity)	8 Kbps	8 Kbps	8 Kbps
Class Mapping (trTCM / srTCM)	srTCM, trTCM	srTCM, trTCM	srTCM, trTCM
ACL			
ACL Entry (Ingress / Egress)	Ingress / Egress	Ingress / Egress	Ingress / Egress
VLAN-Based ACL	✓	✓	✓
Time-Based ACL	✓	✓	✓
Security			
SSH	✓	✓	✓
TLS / SSL Support	TLS, SSL	TLS, SSL	TLS, SSL
IP-MAC-Port Binding (IMPB)	✓	✓	✓
ARP Spoofing Prevention	✓	✓	✓
BPDU Attack Protection	✓	✓	✓
Broadcast / Multicast / Unicast Storm Control	✓	✓	✓
AAA			
802.1X Access Control	✓	✓	✓
RADIUS	✓	✓	✓
TACACS+	✓	✓	✓
Management			
SNMP	v1 / v2c / v3	v1 / v2c / v3	v1 / v2c / v3
RMON v1 / v2	v1 / v2	v1 / v2	v1 / v2
sFlow	✓	✓	✓
OAM (802.3ah, 802.1ag, ITU-T Y.1731)	✓	✓	✓
ZTP			
Command Line Interface (CLI)	Full	Full	Full
Web-Based GUI	✓	✓	✓



Stackable Smart Switches

Reliable Performance, Effortless Scalability

Physical Stacking

sFlow Monitoring

ERPS Recovery

ACL Protection

VLAN

Compliant with IEEE 802.1Q VLAN

Loopback Detection

Static Route

IGMP Snooping

Stackable smart switches are advanced versions of standard smart switches, able to quickly expand networks as the business grows. 10G SFP+ uplink ports of stackable smart switches can form a logical switch, enhancing network availability and reducing complexity for small and midsize businesses.

Explore the Possibilities

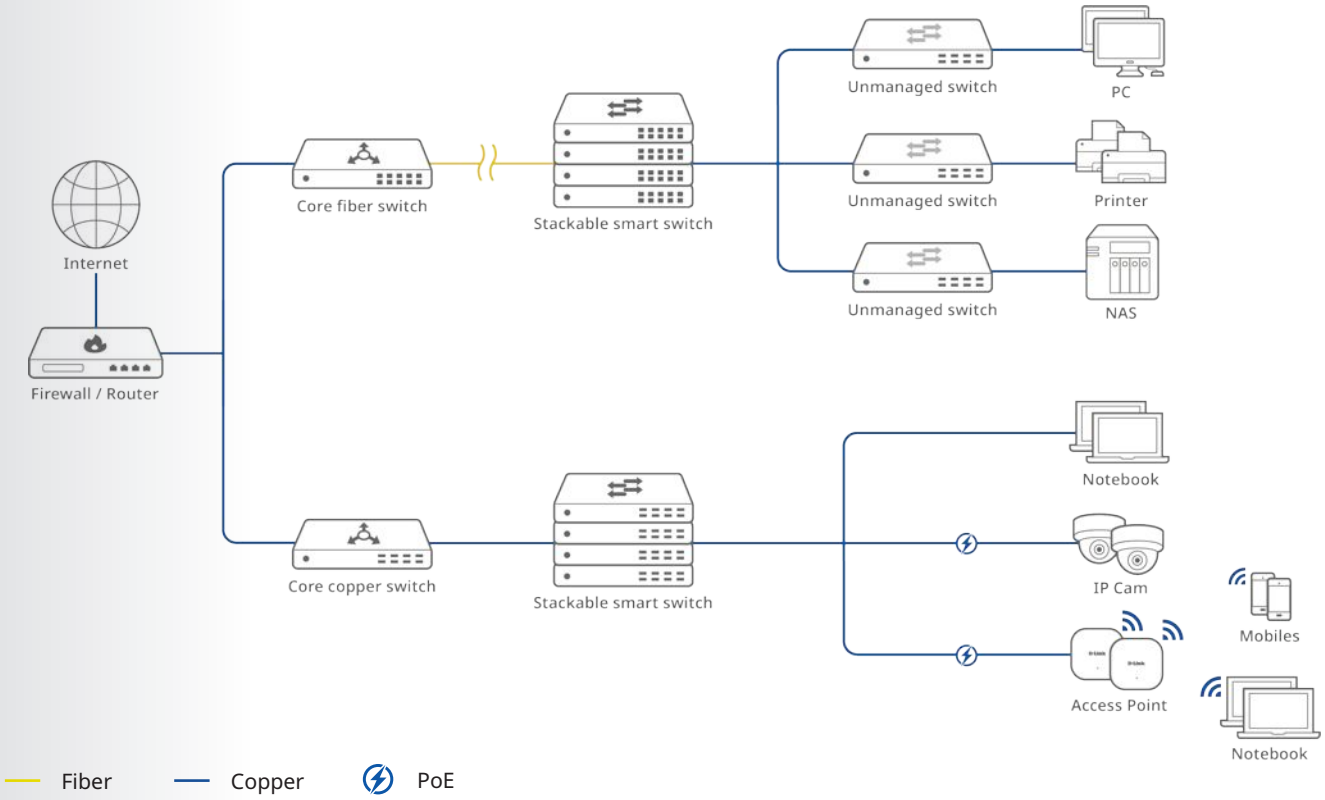

Copper Switches

- Fast 10G connectivity
- Improved performance, reliability, and scalability
- Cost-effective solution for SMBs to expand the network via stacking

Series	Model	Description
DGS-1510	DGS-1510-20	16 Ports 1G + 2 Ports 1G SFP + 2 Ports 10G SFP+ Stackable Smart Switch
	DGS-1510-28X	24 Ports 1G + 4 Ports 10G SFP+ Stackable Smart Switch
	DGS-1510-52X	48 Ports 1G + 4 Ports 10G SFP+ Stackable Smart Switch
DGS-1520	DGS-1520-28	24 Ports 1G + 2 Ports 10G + 2 Ports 10G SFP+ Stackable Smart Switch
	DGS-1520-52	48 Ports 1G + 2 Ports 10G + 2 Ports 10G SFP+ Stackable Smart Switch
DGS-1530	DGS-1530-10	8 Ports 1G + 2 Ports 10G SFP+ Stackable Smart Switch
	DGS-1530-20	16 Ports 1G + 4 Ports 10G SFP+ Stackable Smart Switch
	DGS-1530-28	24 Ports 1G + 4 Ports 10G SFP+ Stackable Smart Switch
	DGS-1530-52	48 Ports 1G + 4 Ports 10G SFP+ Stackable Smart Switch

Copper PoE Switches

- Power and data over one cable
- Stacking for scalability
- Centralized Power management

Series	Model	Description
DGS-1510	DGS-1510-28XMP	24 Ports 1G PoE+ + 4 Ports 10G SFP+ Stackable Smart Switch, 370W
	DGS-1510-52XMP	48 Ports 1G PoE+ + 4 Ports 10G SFP+ Stackable Smart Switch, 370W
DGS-1520	DGS-1520-28MP	20 Ports 1G PoE+ + 4 Ports 2.5G + 2 Ports 10G + 2 Ports 10G SFP+ Stackable Smart Switch, 370W
	DGS-1520-52MP	44 Ports 1G PoE+ + 4 Ports 2.5G + 2 Ports 10G + 2 Ports 10G SFP+ Stackable Smart Switch, 370W
DGS-1530	DGS-1530-28P	24 Ports 1G PoE+ + 4 Ports 10G SFP+ Stackable Smart Switch, 370W
	DGS-1530-52P	48 Ports 1G PoE+ + 4 Ports 10G SFP+ Stackable Smart Switch, 370W

Fiber Switches

- Higher cost but more secure than copper switches
- Provides flexibility and scalability for SMB network management
- Aggregates network traffic of remote smart switches

Series	Model	Description
DGS-1530	DGS-1530-28S	24 Ports 1G SFP + 4 Ports 10G SFP+ Stackable Smart Switch

DGS-1510 Series

1G Layer 2 Stackable Smart

Physical stacking up to 6 units
Stacking bandwidth up to 40 Gbps



Physical Stacking

ERPS Recovery

sFlow Monitoring

ACL Protection

PoE Budget up to 740W

Advanced Hardware

ERPS

Management

Nuclias Unity
Nuclias Network Controller
Command Line Interface (CLI)
Web-based GUI

L3

Features
IP interface
IPv6 Neighbor Discovery (ND)
Static route
Default route

L2

Features / Security
802.1AX link aggregation
STP, RSTP, MSTP
Broadcast / multicast / unicast storm control
IP source guard
Dynamic ARP Inspection (DAI)
ARP / BPDU / DoS spoofing prevention

Copper Switches



DGS-1510-20

16 x 1G / 2 x 1G SFP + 2 x 10G SFP+



DGS-1510-28X

24 x 1G / 4 x 10G SFP+



DGS-1510-52X

48 x 1G / 4 x 10G SFP+

Copper PoE Switches



DGS-1510-28XMP

24 x 1G PoE / 4 x 10G SFP+, 370W



DGS-1510-52XMP

48 x 1G PoE / 4 x 10G SFP+, 370W

Stackable Smart Switches / DGS-1510 Series

Model	DGS-1510-20	DGS-1510-28X	DGS-1510-28XMP	DGS-1510-52X	DGS-1510-52XMP
Product Image					
Hardware					
Number of 1G Ports	16	24	24	48	48
Number of 1G Combo Ports					
Number of 1G SFP Ports	2				
Number of 2.5G Ports					
Number of 10G Ports					
Number of 10G Combo Ports					
Number of 10G SFP+ Ports	2	4	4	4	4
Switching Capacity	76 Gbps	128 Gbps	128 Gbps	176 Gbps	176 Gbps
MAC Address	16 K	16 K	16 K	16 K	16 K
PoE Standards			IEEE 802.3af / at		IEEE 802.3af / at
PoE Power Budget			370W		370W (740W with RPS)
PoE Capable Ports			Port 1-24, up to 30W		Port 1-48, up to 30W
PD-ALive			✓		✓
Perpetual PoE					
Fast PoE					
Power Supply Type	Internal	Internal	Internal	Internal	Internal
Redundant Power Supply					RPS
Fan	1 x Fixed Fan	1 x Fixed Fan	2 x Fixed Fans	1 x smart fan	4 x Fixed Fans
Physical Stacking (Device / Max Bandwidth)	6 / 40G	6 / 40G	6 / 40G	6 / 40G	6 / 40G
Surge Protection					
Dimension	280 x 180 x 44 mm	440 x 210 x 44 mm	440 x 309 x 44 mm	440 x 210 x 44 mm	440 x 309 x 44 mm
D-Link Green, 802.3az EEE	✓	✓	✓	✓	✓
Management Port					
Console Port (RJ-45)	✓	✓	✓	✓	✓
L2					
Virtual Stacking (Device)	32	32	32	32	32
Spanning Tree	STP, RSTP, MSTP	STP, RSTP, MSTP	STP, RSTP, MSTP	STP, RSTP, MSTP	STP, RSTP, MSTP
G.8032 ERPS	ERPS	ERPS	ERPS	ERPS	ERPS
Link Aggregation	802.3ad, 802.1AX	802.3ad, 802.1AX	802.3ad, 802.1AX	802.3ad, 802.1AX	802.3ad, 802.1AX
IGMP Snooping	✓	✓	✓	✓	✓
VLAN					
VLAN Group	4 K	4 K	4 K	4 K	4 K
Protocol-Based VLAN	✓	✓	✓	✓	✓
Subnet-Based VLAN					
Port-Based VLAN					
MAC VLAN	✓	✓	✓	✓	✓
GVRP	✓	✓	✓	✓	✓
VLAN Translation					
Private VLAN					
Asymmetric VLAN	✓	✓	✓	✓	✓
Voice VLAN	✓	✓	✓	✓	✓
Surveillance VLAN	✓	✓	✓	✓	✓
ISM VLAN					
Double VLAN (Q-in-Q)					
Selective Q-in-Q					

Model	DGS-1510-20	DGS-1510-28X	DGS-1510-28XMP	DGS-1510-52X	DGS-1510-52XMP
Product Image					
L3					
IP Interfaces	16	16	16	16	16
IPv4 / IPv6 Routing Table					
Static Route for IPv4 / IPv6	64 / 32	64 / 32	64 / 32	64 / 32	64 / 32
Policy-Based Route (PBR)					
QoS					
802.1p QoS	✓	✓	✓	✓	✓
Number of Queues per Port	8	8	8	8	8
Bandwidth Control (Min. Granularity)	64 Kbps	64 Kbps	64 Kbps	64 Kbps	64 Kbps
Class Mapping (trTCM / srTCM)					
Surveillance Mode					
Video Surveillance Mode	✓	✓	✓	✓	✓
ONVIF Device Discovery	✓	✓	✓	✓	✓
Video Surveillance Topology	✓	✓	✓	✓	✓
Video Surveillance Device Information	✓	✓	✓	✓	✓
ACL					
ACL Entry (Ingress / Egress)					
VLAN-Based ACL	✓	✓	✓	✓	✓
Time-Based ACL	✓	✓	✓	✓	✓
Security					
SSH	✓	✓	✓	✓	✓
TLS / SSL Support	SSL	SSL	SSL	SSL	SSL
IP-MAC-Port Binding (IMPB)	✓	✓	✓	✓	✓
URPF					
ARP Spoofing Prevention	✓	✓	✓	✓	✓
BPDU Attack Protection	✓	✓	✓	✓	✓
Broadcast / Multicast / Unicast Storm Control	✓	✓	✓	✓	✓
AAA					
802.1X Access Control	✓	✓	✓	✓	✓
RADIUS	✓	✓	✓	✓	✓
TACACS+	✓	✓	✓	✓	✓
Management					
SNMP	v1 / v2c / v3	v1 / v2c / v3	v1 / v2c / v3	v1 / v2c / v3	v1 / v2c / v3
RMON v1 / v2	✓	✓	✓	✓	✓
sFlow	✓	✓	✓	✓	✓
OAM (802.3ah, 802.1ag, ITU-T Y.1731)					
ZTP					
Command Line Interface (CLI)	Full	Full	Full	Full	Full
Web-Based GUI	✓	✓	✓	✓	✓

Edge Switches-Stackable Smart

DGS-1520 Series

1G Layer 2 Stackable Smart

Physical Stacking of up to 8 units
Stacking bandwidth up to 80 Gbps



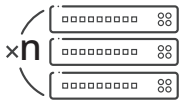

Stackable

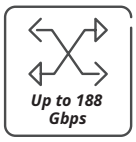

High Capacity

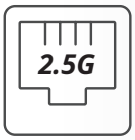

Multi-Gigabit Ports

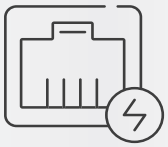

PoE Budget up to 740W

Advanced Hardware

Redundant Power Supply (RPS) support
Supports 2.5G PoE ports for Wi-Fi 6 access points
10GBASE-T and SFP+ port for stacking
Time-based PoE

Management

Nuclias Unity
Nuclias Network Controller
Command Line Interface (CLI)
Web-based GUI
Zero Touch Provisioning (ZTP)

L3

Features
IPv4 / IPv6 Default route
IPv4 / IPv6 Static route
Policy-Based Route (PBR)
RIPv1 / v2 / ng
OSPF
Equal-Cost Multi-Path Route (ECMP)
Weighted-Cost Multi-Path Route (WCMP)
IGMP v1 / v2 / v3

L2

Features / Security
Loopback Detection
Port Mirroring
VLAN Mirroring
RSPAN
L2 Protocol Tunneling
Ethernet Ring Protection Switching (ERPS) v1 / v2
IGMP Snooping
Double VLAN (Q-in-Q)

Copper Switches



DGS-1520-28

24 x 1G / 2 x 10G + 2 x 10G SFP+



DGS-1520-52

48 x 1G / 2 x 10G + 2 x 10G SFP+

Copper PoE Switches



DGS-1520-28MP

20 x 1G PoE + 4 x 2.5G PoE / 2 x 10G +
2 x 10G SFP+, 370W



DGS-1520-52MP

44 x 1G PoE + 4 x 2.5G PoE / 2 x 10G +
2 x 10G SFP+, 370W

Stackable Smart Switches / DGS-1520 Series

Model	DGS-1520-28	DGS-1520-28MP	DGS-1520-52	DGS-1520-52MP
Product Image				
Hardware				
Number of 1G Ports	24	20	48	44
Number of 2.5G Ports		4		4
Number of 10G Ports	2	2	2	2
Number of 10G SFP+ Ports	2	2	2	2
Switching Capacity	128 Gbps	140 Gbps	176 Gbps	188 Gbps
MAC Address	16 K	16 K	16 K	16 K
PoE Standards		IEEE 802.3af / at		IEEE 802.3af / at
PoE Power Budget		370W (740W with RPS)		370W (740W with RPS)
PoE Capable Ports		Port 1-24, up to 30W		Port 1-48, up to 30W
Power Supply Type	Internal	Internal	Internal	Internal
Redundant Power Supply	RPS	RPS	RPS	RPS
Fan	1 x Fixed Fan	4 x Fixed Fans	2 x Fixed Fans	4 x Fixed Fans
Physical Stacking (Device / Max Bandwidth)	8 / 80G	8 / 80G	8 / 80G	8 / 80G
Dimension	441 x 208 x 44 mm	441 x 309 x 44 mm	441 x 208 x 44 mm	441 x 309 x 44 mm
Management Port	✓		✓	
Console Port (RJ-45)	✓	✓	✓	✓
L2				
Virtual Stacking (Device)	32	32	32	32
Spanning Tree	STP, RSTP, MSTP	STP, RSTP, MSTP	STP, RSTP, MSTP	STP, RSTP, MSTP
G.8032 ERPS	ERPS	ERPS	ERPS	ERPS
Link Aggregation	802.3ad, 802.1AX	802.3ad, 802.1AX	802.3ad, 802.1AX	802.3ad, 802.1AX
IGMP Snooping	✓	✓	✓	✓
VLAN				
VLAN Group	4 K	4 K	4 K	4 K
Protocol-Based VLAN	✓	✓	✓	✓
Subnet-Based VLAN	✓	✓	✓	✓
Port-Based VLAN	✓	✓	✓	✓
MAC VLAN	✓	✓	✓	✓
GVRP	✓	✓	✓	✓
VLAN Translation	✓	✓	✓	✓
Private VLAN	✓	✓	✓	✓
Asymmetric VLAN	✓	✓	✓	✓
Voice VLAN	✓	✓	✓	✓
ISM VLAN	✓	✓	✓	✓
Double VLAN (Q-in-Q)	✓	✓	✓	✓
Selective Q-in-Q	✓	✓	✓	✓

Model	DGS-1520-28	DGS-1520-28MP	DGS-1520-52	DGS-1520-52MP
Product Image				
L3				
IP Interfaces	16	16	16	16
IPv4 / IPv6 Routing Table	1024 IPv4/IPv6 shared	1024 IPv4/IPv6 shared	1024 IPv4/IPv6 shared	1024 IPv4/IPv6 shared
Static Route for IPv4 / IPv6	512 / 256	512 / 256	512 / 256	512 / 256
Policy-Based Route (PBR)				
QoS				
802.1p QoS	✓	✓	✓	✓
Number of Queues per Port	8	8	8	8
Bandwidth Control (Min. Granularity)	8 Kbps	8 Kbps	8 Kbps	8 Kbps
Class Mapping (trTCM / srTCM)				
Surveillance Mode				
Video Surveillance Mode				
ONVIF Device Discovery				
Video Surveillance Topology				
Video Surveillance Device Information				
ACL				
ACL Entry (Ingress / Egress)	Ingress / Egress	Ingress / Egress	Ingress / Egress	Ingress / Egress
VLAN-Based ACL	✓	✓	✓	✓
Time-Based ACL	✓	✓	✓	✓
Security				
SSH	✓	✓	✓	✓
TLS / SSL Support	TLS	TLS	TLS	TLS
IP-MAC-Port Binding (IMPB)	✓	✓	✓	✓
URPF	✓	✓	✓	✓
ARP Spoofing Prevention	✓	✓	✓	✓
BPDU Attack Protection	✓	✓	✓	✓
Broadcast / Multicast / Unicast Storm Control	✓	✓	✓	✓
AAA				
802.1X Access Control	✓	✓	✓	✓
RADIUS	✓	✓	✓	✓
TACACS+	✓	✓	✓	✓
Management				
SNMP	v1 / v2c / v3	v1 / v2c / v3	v1 / v2c / v3	v1 / v2c / v3
RMON v1 / v2	✓	✓	✓	✓
sFlow	✓	✓	✓	✓
OAM (802.3ah, 802.1ag, ITU-T Y.1731)	✓	✓	✓	✓
ZTP	✓	✓	✓	✓
Command Line Interface (CLI)	Full	Full	Full	Full
Web-Based GUI	✓	✓	✓	✓

DGS-1530 Series

1G Layer 2 Stackable Smart

Physical stacking up to 9 units
Stacking bandwidth up to 80 Gbps



Physical Stacking

ERPS Recovery

sFlow Monitoring

ACL Protection

PoE Budget up to 740W

Advanced Hardware

Redundant Power Supply (RPS)
6kV surge protection

Management

Nuclias Unity
Nuclias Network Controller
Command Line Interface (CLI)
Web-based GUI

L3

Features
Default route
IP interface
IPv6 Neighbor Discovery (ND)
Static route

L2

Features / Security
802.1AX link aggregation
STP, RSTP, MSTP
Broadcast / multicast / unicast storm control
IP source guard
Q-in-Q and selective Q-in-Q
ARP / BPDU / DoS spoofing prevention

Copper Switches



DGS-1530-10

8 x 1G / 2 x 10G SFP+



DGS-1530-20

16 x 1G / 4 x 10G SFP+



DGS-1530-28

24 x 1G / 4 x 10G SFP+



DGS-1530-52

48 x 1G / 4 x 10G SFP+

Copper PoE Switches



DGS-1530-28P

24 x 1G PoE / 4 x 10G SFP+, 370W

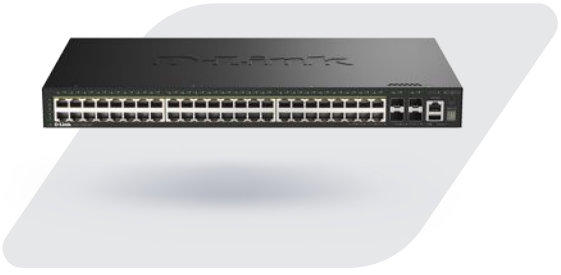

DGS-1530-52P

48 x 1G PoE / 4 x 10G SFP+, 370W

Fiber Switches



DGS-1530-28S

24 x 1G SFP / 4 x 10G SFP+

Stackable Smart Switches / DGS-1530 Series

Model	DGS-1530-10	DGS-1530-20	DGS-1530-28	DGS-1530-28P
Product Image				
Hardware				
Number of 1G Ports	8	16	24	24
Number of 1G Combo Ports				
Number of 1G SFP Ports				
Number of 2.5G Ports				
Number of 10G Ports				
Number of 10G Combo Ports				
Number of 10G SFP+ Ports	2	4	4	4
Switching Capacity	56 Gbps	112 Gbps	128 Gbps	128 Gbps
MAC Address	16 K	16 K	16 K	16 K
PoE Standards				IEEE 802.3af / at
PoE Power Budget				370W
PoE Capable Ports				Ports 1-24, up to 30W
PD-ALive				✓
Perpetual PoE				✓
Fast PoE				✓
Power Supply Type	Internal	Internal	Internal	Internal
Redundant Power Supply	RPS	RPS	RPS	NA
Fan	Fanless	Fanless	1 x Smart Fan	3 x Smart Fans
Physical Stacking (Device / Max Bandwidth)	9 / 40G	9 / 80G	9 / 80G	9 / 80G
Surge Protection	6kV	6kV	6kV	6kV
Dimension	280 x 180 x 44 mm	280 x 180 x 44 mm	440 x 140 x 44 mm	440 x 250 x 44 mm
D-Link Green, 802.3az EEE	✓	✓	✓	✓
Management Port				
Console Port (RJ-45)	✓	✓	✓	✓
L2				
Virtual Stacking (Device)	32	32	32	32
Spanning Tree	STP, RSTP, MSTP	STP, RSTP, MSTP	STP, RSTP, MSTP	STP, RSTP, MSTP
G.8032 ERPS	ERPS	ERPS	ERPS	ERPS
Link Aggregation	802.3ad, 802.1AX	802.3ad, 802.1AX	802.3ad, 802.1AX	802.3ad, 802.1AX
IGMP Snooping	✓	✓	✓	✓
VLAN				
VLAN Group	4 K	4 K	4 K	4 K
Protocol-Based VLAN	✓	✓	✓	✓
Subnet-Based VLAN				
Port-Based VLAN	✓	✓	✓	✓
MAC VLAN	✓	✓	✓	✓
GVRP	✓	✓	✓	✓
VLAN Translation	✓	✓	✓	✓
Private VLAN	✓	✓	✓	✓
Asymmetric VLAN	✓	✓	✓	✓
Voice VLAN	✓	✓	✓	✓
Surveillance VLAN	✓	✓	✓	✓
ISM VLAN	✓	✓	✓	✓
Double VLAN (Q-in-Q)	✓	✓	✓	✓
Selective Q-in-Q	✓	✓	✓	✓

Model	DGS-1530-10	DGS-1530-20	DGS-1530-28	DGS-1530-28P
Product Image				
L3				
IP Interfaces	128	128	128	128
IPv4 / IPv6 Routing Table				
Static Route for IPv4 / IPv6	256 / 128	256 / 128	256 / 128	256 / 128
Policy-Based Route (PBR)				
QoS				
802.1p QoS	✓	✓	✓	✓
Number of Queues per Port	8	8	8	8
Bandwidth Control (Min. Granularity)	64 Kbps	64 Kbps	64 Kbps	64 Kbps
Class Mapping (trTCM / srTCM)				
Surveillance Mode				
Video Surveillance Mode				
ONVIF Device Discovery				
Video Surveillance Topology				
Video Surveillance Device Information				
ACL				
ACL Entry (Ingress / Egress)	Ingress / Egress	Ingress / Egress	Ingress / Egress	Ingress / Egress
VLAN-Based ACL	✓	✓	✓	✓
Time-Based ACL	✓	✓	✓	✓
Security				
SSH	✓	✓	✓	✓
TLS / SSL Support	TLS, SSL	TLS, SSL	TLS, SSL	TLS, SSL
IP-MAC-Port Binding (IMPB)	✓	✓	✓	✓
URPF				
ARP Spoofing Prevention	✓	✓	✓	✓
BPDU Attack Protection	✓	✓	✓	✓
Broadcast / Multicast / Unicast Storm Control	✓	✓	✓	✓
AAA				
802.1X Access Control	✓	✓	✓	✓
RADIUS	✓	✓	✓	✓
TACACS+	✓	✓	✓	✓
Management				
SNMP	v1 / v2c / v3	v1 / v2c / v3	v1 / v2c / v3	v1 / v2c / v3
RMON v1 / v2	✓	✓	✓	✓
sFlow	✓	✓	✓	✓
OAM (802.3ah, 802.1ag, ITU-T Y.1731)	✓	✓	✓	✓
ZTP	✓	✓	✓	✓
Command Line Interface (CLI)	Full	Full	Full	Full
Web-Based GUI	✓	✓	✓	✓

Stackable Smart Switches / DGS-1530 Series

Model	DGS-1530-28S	DGS-1530-28SC	DGS-1530-52	DGS-1530-52P
Product Image				
Hardware				
Number of 1G Ports			48	48
Number of 1G Combo Ports		4		
Number of 1G SFP Ports	24	20		
Number of 2.5G Ports				
Number of 10G Ports				
Number of 10G Combo Ports				
Number of 10G SFP+ Ports	4	4	4	
Switching Capacity	128 Gbps	128 Gbps	176 Gbps	176 Gbps
MAC Address	16 K	16 K	16 K	16 K
PoE Standards				IEEE 802.3af / at
PoE Power Budget				370W (740W with RPS)
PoE Capable Ports				Ports 1-48, up to 30W
PD-ALive				✓
Perpetual PoE				✓
Fast PoE				✓
Power Supply Type	Internal	Internal	Internal	Internal
Redundant Power Supply	RPS	RPS	RPS	RPS
Fan	2 x Smart Fans	2 x Smart Fans	2 x Smart Fans	3 x Smart Fans
Physical Stacking (Device / Max Bandwidth)	9 / 80G	9 / 80G	9 / 80G	9 / 80G
Surge Protection	6kV	6kV	6kV	6kV
Dimension	440 x 210 x 44 mm	440 x 210 x 44 mm	440 x 210 x 44 mm	440 x 250 x 44 mm
D-Link Green, 802.3az EEE	✓	✓	✓	✓
Management Port	✓	✓	✓	✓
Console Port (RJ-45)	✓	✓	✓	✓
L2				
Virtual Stacking (Device)	32	32	32	32
Spanning Tree	STP, RSTP, MSTP	STP, RSTP, MSTP	STP, RSTP, MSTP	STP, RSTP, MSTP
G.8032 ERPS	ERPS	ERPS	ERPS	ERPS
Link Aggregation	802.3ad, 802.1AX	802.3ad, 802.1AX	802.3ad, 802.1AX	802.3ad, 802.1AX
IGMP Snooping	✓	✓	✓	✓
VLAN				
VLAN Group	4 K	4 K	4 K	4 K
Protocol-Based VLAN	✓	✓	✓	✓
Subnet-Based VLAN				
Port-Based VLAN				
MAC VLAN	✓	✓	✓	✓
GVRP	✓	✓	✓	✓
VLAN Translation	✓	✓	✓	✓
Private VLAN	✓	✓	✓	✓
Asymmetric VLAN	✓	✓	✓	✓
Voice VLAN	✓	✓	✓	✓
Surveillance VLAN	✓	✓	✓	✓
ISM VLAN	✓	✓	✓	✓
Double VLAN (Q-in-Q)	✓	✓	✓	✓
Selective Q-in-Q	✓	✓	✓	✓

Model	DGS-1530-28S	DGS-1530-28SC	DGS-1530-52	DGS-1530-52P
Product Image				
L3				
IP Interfaces	128	64	128	128
IPv4 / IPv6 Routing Table				
Static Route for IPv4 / IPv6	256 / 128	IPv4 64 / IPv6 32	256 / 128	256 / 128
Policy-Based Route (PBR)				
QoS				
Number of Queues per Port	8	8	8	8
802.1p QoS	✓	✓	✓	✓
Bandwidth Control (Min. Granularity)	64 Kbps	64 Kbps	64 Kbps	64 Kbps
Class Mapping (trTCM / srTCM)				
Surveillance Mode				
Video Surveillance Mode				
ONVIF Device Discovery				
Video Surveillance Topology				
Video Surveillance Device Information				
ACL				
ACL Entry (Ingress / Egress)	Ingress / Egress	Ingress / Egress	Ingress / Egress	Ingress / Egress
VLAN-Based ACL	✓	✓	✓	✓
Time-Based ACL	✓	✓	✓	✓
Security				
SSH	✓	✓	✓	✓
TLS / SSL Support	TLS, SSL	TLS, SSL	TLS, SSL	TLS, SSL
IP-MAC-Port Binding (IMPB)	✓	✓	✓	✓
URPF				
ARP Spoofing Prevention	✓	✓	✓	✓
BPDU Attack Protection	✓	✓	✓	✓
Broadcast / Multicast / Unicast Storm Control	✓	✓	✓	✓
AAA				
802.1X Access Control	✓	✓	✓	✓
RADIUS	✓	✓	✓	✓
TACACS+	✓	✓	✓	✓
Management				
SNMP	v1 / v2c / v3	v1 / v2c / v3	v1 / v2c / v3	v1 / v2c / v3
RMON v1 / v2	✓	✓	✓	✓
sFlow	✓	✓	✓	✓
OAM (802.3ah, 802.1ag, ITU-T Y.1731)	✓	✓	✓	✓
ZTP	✓	✓	✓	✓
Command Line Interface (CLI)	Full	Full	Full	Full
Web-Based GUI	✓	✓	✓	✓

Standard Smart Switches

Intelligent Switching for Every Need



SNMP Management

Static Route

Traffic Segmentation

Centralized Management

User Authentication

IGMP Snooping

Link Aggregation

11 Web GUI Languages

Standard Smart switches offer enhanced control, visibility, and performance compared to unmanaged switches. Features like QoS, VLANs, and basic security (ACLs, 802.1X) improve network optimization and protect against unauthorized access. With a user-friendly web interface, they are easy to configure and manage, making them cost-effective for SMBs and home networks.

These switches connect a variety of devices including computers, NAS, printers, IP cameras, VoIP phones, WAPs, and smart home devices. With Gigabit and multi-Gigabit port options, they provide scalable solutions for diverse business networking needs in SMBs, home networks, branch offices, schools, retail stores and much more.

Explore the Possibilities

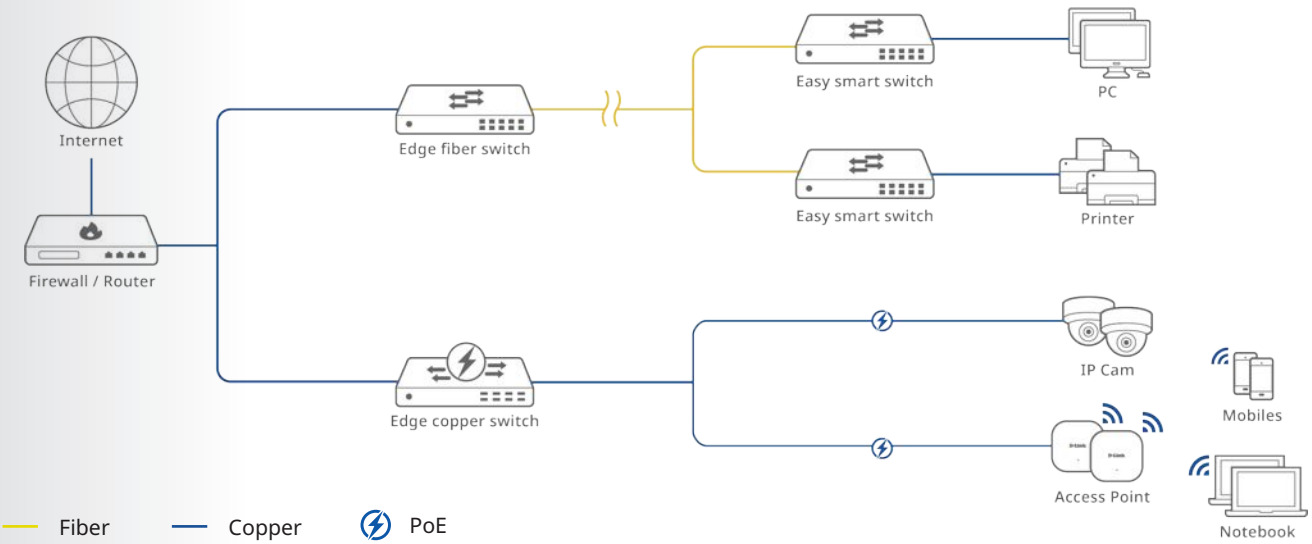

Copper Switches

- Cost-effective solution with 10 to 52 ports
- 1G / 2.5G / 10G BASE-T speeds
- Ideal for computers, printers, NAS, and IoT devices

Series	Model	Description
DGS-1210	DGS-1210-10	8 Ports 1G + 2 Ports 1G SFP Standard Smart Switch
	DGS-1210-20	16 Ports 1G + 4 Ports 1G Combo Standard Smart Switch
	DGS-1210-28	24 Ports 1G + 4 Ports 1G Combo Standard Smart Switch
	DGS-1210-52	48 Ports 1G + 4 Ports 1G Combo Standard Smart Switch
DXS-1210	DXS-1210-12TC	8 Ports 10G + 2 Ports 10G SFP+ + 2 Ports 10G Combo Standard Smart Switch
	DXS-1210-28T	24 Ports 10G + 4 Ports 25G SFP28 Standard Smart Switch
DGS-1250	DGS-1250-28X	24 Ports 1G + 4 Ports 10G SFP+ Standard Smart Switch
	DGS-1250-52X	48 Ports 1G + 4 Ports 10G SFP+ Standard Smart Switch
DMS-1250	DMS-1250-10S	8 Ports 2.5G + 2 Ports 10G SFP+ Standard Smart Switch
	DMS-1250-12	8 Ports 2.5G + 2 Ports 10G + 2 Ports 10G SFP+ Standard Smart Switch
	DMS-1250-18	16 Ports 2.5G + 2 Ports 10G SFP+ Standard Smart Switch
	DMS-1250-28	24 Ports 2.5G + 4 Ports 10G SFP+ Standard Smart Switch

Copper PoE Switches

- Easy PoE deployment with cost savings
- Versatile high-speed PoE ports
- Smart PoE control and features

Series	Model	Description
DGS-1210	DGS-1210-10P	8 Ports 1G PoE+ + 2 Ports 1G SFP Standard Smart Switch, 65W
	DGS-1210-10MP	8 Ports 1G PoE+ + 2 Ports 1G SFP Standard Smart Switch, 130W
	DGS-1210-28P	24 Ports 1G PoE+ + 4 Ports 1G Combo Standard Smart Switch, 193W
	DGS-1210-28MP	24 Ports 1G PoE+ + 4 Ports 1G Combo Standard Smart Switch, 370W
	DGS-1210-52MP	48 Ports 1G PoE+ + 4 Ports 1G Combo Standard Smart Switch, 370W
	DGS-1210-52MPP	48 Ports 1G PoE+ + 4 Ports 1G SFP Standard Smart Switch, 740W
DGS-F1210	DGS-F1210-18PS-E	16 Ports 1G PoE+ + 2 Ports 1G SFP Standard Smart Switch, 150W
	DGS-F1210-26PS-E	24 Ports 1G PoE+ + 2 Ports 1G SFP Standard Smart Switch, 400W
DXS-1210	DXS-1210-10MP	8 Ports 10G PoE++ + 2 Ports 10G SFP+ Standard Smart Switch, 370W
DGS-1250	DGS-1250-28XMP	24 Ports 1G PoE+ + 4 Ports 10G SFP+ Standard Smart Switch, 370W
	DGS-1250-52XMP	48 Ports 1G PoE+ + 4 Ports 10G SFP+ Standard Smart Switch, 370W
DMS-1250	DMS-1250-10SP	8 Ports 2.5G PoE+ + 2 Ports 10G SFP+ Standard Smart Switch, 240W
	DMS-1250-12TP	8 Ports 2.5G PoE+ + 2 Ports 10G + 2 Ports 10G SFP+ Standard Smart Switch, 240W
	DMS-1250-18P	16 Ports 2.5G PoE++ + 2 Ports 10G SFP+ Standard Smart Switch, 370W
	DMS-1250-28P	24 Ports 2.5G PoE++ + 4 Ports 10G SFP+ Standard Smart Switch, 475W
DXS-1250	DXS-1250-28YP	24 Ports 10G PoE++ + 4 Ports 25G SFP28 Standard Smart Switch, 470W

Fiber Switches

- 10G and 1G fiber connectivity
- Low latency and high bandwidth
- Future-proof scalability

Series	Model	Description
DXS-1210	DXS-1210-12SC	10 Ports 10G SFP+ + 2 Ports 10G Combo Standard Smart Switch
	DXS-1210-28S	24 Ports 10G SFP+ + 4 Ports 10G Standard Smart Switch

DGS-1210 Series

1G Layer 2 Standard Smart

1G downlink with 1G SFP uplink
PoE models support up to 30W/port



SNMP Management

ACL Protection

Centralized Management

Static Route

PoE Budget up to 740W

Advanced Hardware

Smart fan
Fiber uplink ports

Management

Nuclias Unity
Nuclias Network Controller
Command Line Interface (CLI)
Web-based GUI

L2

Features / Security
IGMP snooping
VLAN
Broadcast / multicast / unicast storm control
TLS, SSH

Route
Static route

Copper Switches



DGS-1210-10

8 x 1G / 2 x 1G SFP



DGS-1210-20

16 x 1G / 4 x 1G Combo



DGS-1210-28

24 x 1G / 4 x 1G Combo



DGS-1210-52

48 x 1G / 4 x 1G Combo

Copper PoE Switches



DGS-1210-10P

8 x 1G PoE / 2 x 1G SFP, 65W



DGS-1210-10MP

8 x 1G PoE / 2 x 1G SFP, 130W



DGS-1210-28P

24 x 1G PoE / 4 x 1G Combo, 193W



DGS-1210-28MP

24 x 1G PoE / 4 x 1G Combo, 370W



DGS-1210-52MP

48 x 1G PoE / 4 x 1G Combo, 370W



DGS-1210-52MPP

48 x 1G PoE / 4 x 1G SFP, 740W

Standard Smart Switches / DGS-1210 Series

Model	DGS-1210-10	DGS-1210-10P	DGS-1210-10MP	DGS-1210-20	DGS-1210-28
Product Image					
Hardware					
Number of 1G Ports	8	8	8	16	24
Number of 1G Combo Ports				4	4
Number of 1G SFP Ports	2	2	2		
Number of 2.5G Ports					
Number of 10G Ports					
Number of 10G SFP+ Ports					
Number of Combo 10G Ports					
Number of 25G SFP28 Ports					
Switching Capacity	20 Gbps	20 Gbps	20 Gbps	40 Gbps	56 Gbps
MAC Address	8 K	8 K	8 K	16K	8 K
PoE Standards		IEEE 802.3af / at	IEEE 802.3af / at		
PoE Power Budget		65W	130W		
PoE Capable Ports		Port 1-8, up to 30W	Port 1-8, up to 30W		
PD-ALive		✓	✓		
Perpetual PoE		✓			
Fast PoE					
Power Supply Type	Internal	External	Internal	Internal	Internal
Fan	Fanless	Fanless	Fanless	Fanless	Fanless
Surge Protection				1 kV	
Dimension	280 x 126 x 44 mm	280 x 126 x 44 mm	330 x 180 x 44 mm	280 x 180 x 44 mm	440 x 140 x 44 mm
D-Link Green, 802.3az EEE	✓	✓	✓	✓	✓
Console Port (RJ-45)					
L2					
Virtual Stacking (Device)					
Spanning Tree	STP, RSTP, MSTP	STP, RSTP, MSTP	STP, RSTP, MSTP	STP, RSTP, MSTP	STP, RSTP, MSTP
G.8032 ERPS					
Link Aggregation	802.3ad	802.3ad	802.3ad	802.3ad	802.3ad
IGMP Snooping	✓	✓	✓	✓	✓
VLAN					
VLAN Group	256	256	256	256	256
Protocol-Based VLAN					
Subnet-Based VLAN					
Port-Based VLAN					
MAC VLAN					
GVRP					
VLAN Translation					
Asymmetric VLAN	✓	✓	✓	✓	✓
Voice VLAN	✓	✓	✓	✓	✓
Surveillance VLAN	ONVIF	ONVIF	ONVIF	ONVIF	ONVIF
ISM VLAN					
Double VLAN (Q-in-Q)					
Selective Q-in-Q					

Model	DGS-1210-10	DGS-1210-10P	DGS-1210-10MP	DGS-1210-20	DGS-1210-28
Product Image					
L3					
IP Interfaces	4	4	4	4	4
Static Route for IPv4 / IPv6	124 / 50	124 / 50	124 / 50	124 / 50	124 / 50
QoS					
802.1p QoS	✓	✓	✓	✓	✓
Number of Queues per Port	8	8	8	8	8
Bandwidth Control (Min. Granularity)	16 Kbps	16 Kbps	16 Kbps	16 Kbps	16 Kbps
Surveillance Mode					
Video Surveillance Mode					
ONVIF Device Discovery					
Video Surveillance Topology					
Video Surveillance Device Information					
ACL					
ACL Entry (Ingress / Egress)	Ingress	Ingress	Ingress	Ingress	Ingress
VLAN-Based ACL	✓	✓	✓	✓	✓
Time-Based ACL					
Security					
SSH	✓	✓	✓	✓	✓
TLS / SSL Support	TLS	TLS	TLS	TLS	TLS
IP-MAC-Port Binding (IMPB)	✓	✓	✓	✓	✓
ARP Spoofing Prevention	✓	✓	✓	✓	✓
BPDU Attack Protection					
Broadcast / Multicast / Unicast Storm Control	✓	✓	✓	✓	✓
AAA					
802.1X Access Control	✓	✓	✓	✓	✓
RADIUS	✓	✓	✓	✓	✓
TACACS+					
Management					
SNMP	v1 / v2c / v3	v1 / v2c / v3	v1 / v2c / v3	v1 / v2c / v3	v1 / v2c / v3
RMON v1 / v2	v1	v1	v1	v1	v1
sFlow					
OAM (802.3ah, 802.1ag, ITU-T Y.1731)					
Command Line Interface (CLI)	Compact	Compact	Compact	Compact	Compact
Web-Based GUI	✓	✓	✓	✓	✓

Standard Smart Switches / DGS-1210 Series

Model	DGS-1210-28P	DGS-1210-28MP	DGS-1210-52	DGS-1210-52MP	DGS-1210-52MPP
Product Image					
Hardware					
Number of 1G Ports	24	24	48	48	48
Number of 1G Combo Ports	4	4	4	4	
Number of 1G SFP Ports					4
Number of 2.5G Ports					
Number of 10G Ports					
Number of 10G Combo Ports					
Number of 10G SFP+ Ports					
Number of 25G SFP28 Ports					
Switching Capacity	56 Gbps	56 Gbps	104 Gbps	104 Gbps	104 Gbps
MAC Address	8 K	8 K	16 K	16 K	16 K
PoE Standards	IEEE 802.3af / at	IEEE 802.3af / at	-	IEEE 802.3af / at	IEEE 802.3af / at
PoE Power Budget	193W	370W	-	370W	740W
PoE Capable Ports	Port 1-24, up to 30W	Port 1-24, up to 30W	-	Port 1-48, up to 30W	Port 1-48, up to 30W
PD-ALive	✓	✓	-	✓	✓
Perpetual PoE	✓	✓	-	✓	
Fast PoE			-		
Power Supply Type	Internal	Internal	Internal	Internal	Internal
Fan	2 Smart Fans	2 Smart Fans	Fanless	3 Smart Fans	5 Smart Fans
Surge Protection					6 kV
Dimension	440 x 250 x 44 mm	440 x 250 x 44 mm	440 x 210 x 44 mm	440 x 430 x 44 mm	440 x 430 x 44 mm
D-Link Green, 802.3az EEE	✓	✓	✓	✓	
Console Port (RJ-45)					
L2					
Virtual Stacking (Device)					
Spanning Tree	STP, RSTP, MSTP	STP, RSTP, MSTP	STP, RSTP, MSTP	STP, RSTP, MSTP	STP, RSTP, MSTP
G.8032 ERPS					
Link Aggregation	802.3ad	802.3ad	802.3ad	802.3ad	802.3ad
IGMP Snooping	✓	✓	✓	✓	✓
VLAN					
VLAN Group	256	256	256	256	256
Protocol-Based VLAN					
Subnet-Based VLAN					
Port-Based VLAN					
MAC VLAN					
GVRP					
VLAN Translation					
Asymmetric VLAN	✓	✓	✓	✓	✓
Voice VLAN	✓	✓	✓	✓	✓
Surveillance VLAN	ONVIF	ONVIF	ONVIF	ONVIF	ONVIF
ISM VLAN					
Double VLAN (Q-in-Q)					
Selective Q-in-Q					

Model	DGS-1210-28P	DGS-1210-28MP	DGS-1210-52	DGS-1210-52MP	DGS-1210-52MPP
Product Image					
L3					
IP Interfaces	4	4	4	4	
Static Route for IPv4 / IPv6	124 / 50	124 / 50	124 / 50	124 / 50	64 / 32
QoS					
802.1p QoS	✓	✓	✓	✓	✓
Number of Queues per Port	8	8	8	8	8
Bandwidth Control (Min. Granularity)	16 Kbps	16 Kbps	16 Kbps	16 Kbps	16 Kbps
Surveillance Mode					
Video Surveillance Mode					
ONVIF Device Discovery					
Video Surveillance Topology					
Video Surveillance Device Information					
ACL					
ACL Entry (Ingress / Egress)	Ingress	Ingress	Ingress	Ingress	Ingress
VLAN-Based ACL	✓	✓	✓	✓	✓
Time-Based ACL					
Security					
SSH	✓	✓	✓	✓	✓
TLS / SSL Support	TLS	TLS	TLS	TLS	TLS
IP-MAC-Port Binding (IMPB)	✓	✓	✓	✓	✓
ARP Spoofing Prevention	✓	✓	✓	✓	✓
BPDU Attack Protection					
Broadcast / Multicast / Unicast Storm Control	✓	✓	✓	✓	✓
AAA					
802.1X Access Control	✓	✓	✓	✓	✓
RADIUS	✓	✓	✓	✓	✓
TACACS+					
Management					
SNMP	v1 / v2c / v3	v1 / v2c / v3	v1 / v2c / v3	v1 / v2c / v3	v1 / v2c / v3
RMON v1 / v2	v1	v1	v1	v1	v1
sFlow					
OAM (802.3ah, 802.1ag, ITU-T Y.1731)					
Command Line Interface (CLI)	Compact	Compact	Compact	Compact	
Web-Based GUI	✓	✓	✓	✓	✓

DGS-F1210 Series

1G Layer 2 Standard Smart

250m Long Distance PoE



SNMP Management

ACL Protection

250m Long Distance PoE

IGMP Snooping

PoE Budget up to 400W

Advanced Hardware

DIP Switches to toggle:
- Port Isolation
- PoE Extend
- PD Alive
- QoS

Fiber uplink ports

6kV surge protection

Management

Command Line Interface (CLI)

Web-based GUI

L2

Features / Security

IGMP snooping

VLAN

Broadcast / multicast / unicast storm control

TLS, SSH

Copper PoE Switches



DGS-F1210-18PS-E

16 x 1G PoE / 2 x 1G SFP, 150W



DGS-F1210-26PS-E

24 x 1G PoE / 2 x 1G SFP, 400W

Model	DGS-F1210-18PS-E	DGS-F1210-26PS-E
Product Image		
Hardware		
Number of 1G Ports	16	24
Number of 1G Combo Ports	–	–
Number of 1G SFP Ports	2	2
Number of 2.5G Ports	–	–
Number of 10G Ports	–	–
Number of 10G SFP+ Ports	–	–
Number of 10G Combo Ports	–	–
Number of 25G SFP28 Ports	–	–
Switching Capacity	36 Gbps	52 Gbps
MAC Address	8K	8K
PoE Standards	IEEE 802.3af / at	IEEE 802.3af / at
PoE Power Budget	150W	400W
PoE Capable Ports	Ports 1-16, up to 30W	Ports 1-24, up to 30W
PD-ALive	✓	✓
Perpetual PoE	–	–
Fast PoE	–	–
Power Supply Type	Internal	Internal
Fan	1 Fan	1 Fan
Surge Protection	6kV	6kV
Dimension	440 x 180 x 44 mm	440 x 293 x 44 mm
D-Link Green, 802.3az EEE	✓	✓
Console Port (RJ-45)	✓	✓
DIP Switch	Port Isolation / Extend / PD Alive / QoS	Port Isolation / Extend / PD Alive / QoS
L2		
Virtual Stacking (Device)	–	–
Spanning Tree	STP, RSTP, MSTP	STP, RSTP, MSTP
G.8032 ERPS	–	–
Link Aggregation	802.3ad	802.3ad
IGMP Snooping	✓	✓
VLAN		
VLAN Group	4K	4K
Protocol-Based VLAN	✓	✓
Subnet-Based VLAN	✓	✓
Port-Based VLAN	✓	✓
MAC VLAN	✓	✓
GVRP	✓	✓
VLAN Translation	✓	✓
Asymmetric VLAN	✓	✓
Voice VLAN	✓	✓
Surveillance VLAN	ONVIF	ONVIF
ISM VLAN	–	–
Double VLAN (Q-in-Q)	–	–
Selective Q-in-Q	–	–

Model	DGS-F1210-18PS-E	DGS-F1210-26PS-E
Product Image		
L3		
IP Interfaces	1	1
Static Route for IPv4 / IPv6	–	–
QoS		
802.1p QoS	✓	✓
Number of Queues per Port	8	8
Bandwidth Control (Min. Granularity)	8 Kbps	8 Kbps
Surveillance Mode		
Video Surveillance Mode	–	–
ONVIF Device Discovery	–	–
Video Surveillance Topology	–	–
Video Surveillance Device Information	–	–
ACL		
ACL Entry (Ingress / Egress)	✓	✓
VLAN-Based ACL	✓	✓
Time-Based ACL	✓	✓
Security		
SSH	✓	✓
TLS / SSL Support	✓	✓
IP-MAC-Port Binding (IMPB)	✓	✓
ARP Spoofing Prevention	✓	✓
BPDU Attack Protection	✓	✓
Broadcast / Multicast / Unicast Storm Control	✓	✓
AAA		
802.1X Access Control	✓	✓
RADIUS	✓	✓
TACACS+	✓	✓
Management		
SNMP	v1 / v2c / v3	v1 / v2c / v3
RMON v1 / v2	✓	✓
sFlow	–	–
OAM (802.3ah, 802.1ag, ITU-T Y.1731)	–	–
Command Line Interface (CLI)	Compact	Compact
Web-Based GUI	✓	✓

DXS-1210 Series

10G Layer 2 Standard Smart

10G downlink with 10G SFP+ uplink
PoE models support up to 60W / port



5-Speed 10GE

ACL Protection

SNMP Management

Static Route

Advanced Hardware

Console port
Smart fan

Management

Nuclias Unity
Nuclias Network Controller
Command Line Interface (CLI)
Web-based GUI

L2

Features / Security
IGMP snooping
VLAN
Broadcast / multicast / unicast storm control
TLS, SSH
ERPS
Route
Static route

Copper Switches



DXS-1210-12TC

8 x 10G / 2 x 10G SFP+ + 2 x 10G Combo



DXS-1210-28T

24 x 10G / 4 x 25G SFP28

Copper PoE Switch



DXS-1210-10MP

8 x 10G PoE / 2 x 10G SFP+, 370W

Fiber Switches



DXS-1210-12SC

10 x 10G SFP+ / 2 x 10G Combo



DXS-1210-28S

24 x 10G SFP+ / 4 x 10G

Standard Smart Switches / DXS-1210 Series

Model	DXS-1210-12TC	DXS-1210-10MP	DXS-1210-12SC	DXS-1210-28T	DXS-1210-28S
Product Image					
Hardware					
Number of 1G Ports					
Number of 1G Combo Ports					
Number of 1G SFP Ports					
Number of 2.5G Ports					
Number of 10G Ports	8	8		24	4
Number of 10G Combo Ports	2		2		
Number of 10G SFP+ Ports	2	2	10		24
Number of 25G SFP28 Ports				4	
Switching Capacity	240 Gbps	200 Gbps	240 Gbps	680 Gbps	560 Gbps
MAC Address	32 K	32 K	32 K	32 K	32 K
PoE Standards		IEEE 802.3af / at / bt			
PoE Power Budget		370W			
PoE Capable Ports		Port 1-8, up to 60W			
PD-ALive		✓			
Perpetual PoE		✓			
Fast PoE		✓			
Power Supply Type	Internal	Internal	Internal	Internal	Internal
Fan	2 Smart Fans	2 Smart Fans	2 Smart Fans	2 Smart Fans	2 Smart Fans
Surge Protection	1kV / 2kV	6kV	1kV / 2kV	1kV / 2kV	1kV / 2kV
Dimension	440 x 210 x 44 mm	440 x 250 x 44 mm	440 x 210 x 44 mm	440 x 210 x 44 mm	440 x 210 x 44 mm
D-Link Green, 802.3az EEE	✓	✓	✓	✓	✓
Console Port (RJ-45)	✓	✓	✓	✓	✓
L2					
Virtual Stacking (Device)					
Spanning Tree	STP, RSTP, MSTP	STP, RSTP, MSTP	STP, RSTP, MSTP	STP, RSTP, MSTP	STP, RSTP, MSTP
G.8032 ERPS	ERPS	ERPS	ERPS		
Link Aggregation	802.3ad, 802.1AX	802.3ad, 802.1AX	802.3ad, 802.1AX	802.3ad	802.3ad
IGMP Snooping	✓	✓	✓	✓	✓
VLAN					
VLAN Group	4 K	4 K	4 K	4 K	4 K
Protocol-Based VLAN					
Subnet-Based VLAN					
Port-Based VLAN					
MAC VLAN					
GVRP	✓	✓	✓		
VLAN Translation					
Asymmetric VLAN	✓	✓	✓	✓	✓
Voice VLAN	✓	✓	✓	✓	✓
Surveillance VLAN	ONVIF	ONVIF	ONVIF	ONVIF	ONVIF
ISM VLAN					
Double VLAN (Q-in-Q)					
Selective Q-in-Q					

Model	DXS-1210-12TC	DXS-1210-10MP	DXS-1210-12SC	DXS-1210-28T	DXS-1210-28S
Product Image					
L3					
IP Interfaces	8	8	8	4	4
Static Route for IPv4 / IPv6	64 / 64	64 / 64	64 / 64	128 / 64	128 / 64
QoS					
802.1p QoS	✓	✓	✓	✓	✓
Number of Queues per Port	8	8	8	8	8
Bandwidth Control (Min. Granularity)	64 Kbps	64 Kbps	64 Kbps	64 Kbps	64 Kbps
Surveillance Mode					
Video Surveillance Mode					
ONVIF Device Discovery					
Video Surveillance Topology					
Video Surveillance Device Information					
ACL					
ACL Entry (Ingress / Egress)	Ingress	Ingress	Ingress	Ingress / Egress	Ingress / Egress
VLAN-Based ACL	✓	✓	✓	✓	✓
Time-Based ACL	✓	✓	✓	✓	✓
Security					
SSH	✓	✓	✓	✓	✓
TLS / SSL Support	TLS, SSL	TLS, SSL	TLS, SSL	TLS, SSL	TLS, SSL
IP-MAC-Port Binding (IMPB)	✓	✓	✓	✓	✓
ARP Spoofing Prevention				✓	✓
BPDU Attack Protection					
Broadcast / Multicast / Unicast Storm Control	✓	✓	✓	✓	✓
AAA					
802.1X Access Control	✓	✓	✓	✓	✓
RADIUS	✓	✓	✓	✓	✓
TACACS+	✓	✓	✓		
Management / AAA					
SNMP	v1 / v2c / v3	v1 / v2c / v3	v1 / v2c / v3	v1 / v2c / v3	v1 / v2c / v3
RMON v1 / v2	v1	v1	v1	v1 / v2	v1 / v2
sFlow					
OAM (802.3ah, 802.1ag, ITU-T Y.1731)					
Command Line Interface (CLI)	Full	Full	Full	Full	Full
Web-Based GUI	✓	✓	✓	✓	✓

DGS-1250 Series

1G Layer 2 Standard Smart

1G downlink with 10G SFP+ uplink
PoE models support up to 30W / port



Auto Surveillance VLAN

Static Route

SNMP Management

ACL Protection

PoE Budget up to 370W

Advanced Hardware

Console port
Smart fan

Management

Nuclias Unity
Nuclias Network Controller
Command Line Interface (CLI)
Web-based GUI

L2

Features / Security

IGMP snooping
VLAN
Broadcast / multicast / unicast storm control
TLS, SSH

Route

Static route

Copper Switches



DGS-1250-28X

24 x 1G / 4 x 10G SFP+



DGS-1250-52X

48 x 1G / 4 x 10G SFP+

Copper PoE Switches



DGS-1250-28XMP

24 x 1G PoE / 4 x 10G SFP+, 370W



DGS-1250-52XMP

48 x 1G PoE / 4 x 10G SFP+, 370W

Standard Smart Switches / DGS-1250 Series

Model	DGS-1250-28X	DGS-1250-28XMP	DGS-1250-52X	DGS-1250-52XMP
Product Image				
Hardware				
Number of 1G Ports	24	24	48	48
Number of 1G Combo Ports				
Number of 1G SFP Ports				
Number of 2.5G Ports				
Number of 10G Ports				
Number of 10G Combo Ports				
Number of 10G SFP+ Ports	4	4	4	4
Number of 25G SFP28 Ports				
Switching Capacity	128 Gbps	128 Gbps	176 Gbps	176 Gbps
MAC Address	32 K	16 K	32 K	32 K
PoE Standards		802.3af, 802.3at		IEEE 802.3af / at
PoE Power Budget		370W		370W
PoE Capable Ports		Port 1-24, up to 30W		Port 1-48, up to 30W
PD-ALive		✓		✓
Perpetual PoE		✓		✓
Fast PoE		✓		✓
Power Supply Type	Internal	Internal	Internal	Internal
Fan	1 Smart Fan	1 Smart Fan	1 Smart Fan	2 Smart Fans
Surge Protection	6kV	6kV	6kV	6kV
Dimension	440 x 140 x 44 mm	440 x 250 x 44 mm	440 x 250 x 44 mm	440 x 250 x 44 mm
D-Link Green, 802.3az EEE	✓	✓	✓	✓
Console Port (RJ-45)	✓	✓	✓	✓
L2				
Virtual Stacking (Device)				
Spanning Tree	STP, RSTP, MSTP	STP, RSTP, MSTP	STP, RSTP, MSTP	STP, RSTP, MSTP
G.8032 ERPS				ERPS
Link Aggregation	802.3ad, 802.1AX	802.3ad, 802.1AX	802.3ad, 802.1AX	802.3ad, 802.1AX
IGMP Snooping	✓	✓	✓	✓
VLAN				
VLAN Group	4 K	4 K	4 K	4 K
Protocol-Based VLAN				
Subnet-Based VLAN				
Port-Based VLAN				
MAC VLAN				
GVRP				
VLAN Translation				
Asymmetric VLAN	✓	✓	✓	✓
Voice VLAN	✓	✓	✓	✓
Surveillance VLAN	ONVIF	ONVIF	ONVIF	ONVIF
ISM VLAN				
Double VLAN (Q-in-Q)				
Selective Q-in-Q				

Model	DGS-1250-28X	DGS-1250-28XMP	DGS-1250-52X	DGS-1250-52XMP
Product Image				
L3				
IP Interfaces	4	4	4	4
Static Route for IPv4 / IPv6	124 / 50	124 / 50	124 / 50	124 / 50
QoS				
802.1p QoS	✓	✓	✓	✓
Number of Queues per Port	8	8	8	8
Bandwidth Control (Min. Granularity)	16 Kbps	16 Kbps	16 Kbps	16 Kbps
Surveillance Mode				
Video Surveillance Mode	✓	✓	✓	✓
ONVIF Device Discovery	✓	✓	✓	✓
Video Surveillance Topology	✓	✓	✓	✓
Video Surveillance Device Information	✓	✓	✓	✓
ACL				
ACL Entry (Ingress / Egress)	Ingress	Ingress	Ingress	Ingress
VLAN-Based ACL	✓	✓	✓	✓
Time-Based ACL				
Security				
SSH	✓	✓	✓	✓
TLS / SSL Support	TLS, SSL	TLS, SSL	TLS, SSL	TLS, SSL
IP-MAC-Port Binding (IMPB)	✓	✓	✓	✓
ARP Spoofing Prevention	✓	✓	✓	✓
BPDU Attack Protection		✓		
Broadcast / Multicast / Unicast Storm Control	✓	✓	✓	✓
AAA				
802.1X Access Control	✓	✓	✓	✓
RADIUS	✓	✓	✓	✓
TACACS+	✓	✓	✓	✓
Management				
SNMP	v1 / v2c / v3	v1 / v2c / v3	v1 / v2c / v3	v1 / v2c / v3
RMON v1 / v2	v1	v1	v1	v1
sFlow				
OAM (802.3ah, 802.1ag, ITU-T Y.1731)				
Command Line Interface (CLI)	Full	Full	Full	Full
Web-Based GUI	✓	✓	✓	✓

DMS-1250 Series

2.5G Layer 2 Standard Smart

2.5G downlink with 10G SFP+ uplink
DMS-1250-18P and DMS-1250-28P support up to 90W / port



2.5GE Downlinks

6kV Surge Protection

Centralized Management

Static Route

PoE Budget up to 475W

Advanced Hardware

Console port
6kV surge protection

Management

Nuclias Unity
Nuclias Network Controller
Command Line Interface (CLI)
Web-based GUI

L2

Features / Security

IGMP snooping
VLAN
Broadcast / multicast / unicast storm control
TLS, SSH

Route

Static route

Copper Switches



DMS-1250-10S

8 x 2.5G / 2 x 10G SFP+



DMS-1250-12

8 x 2.5G / 2 x 10G + 2 x 10G SFP+



DMS-1250-18

16 x 2.5G / 2 x 10G SFP+



DMS-1250-28

24 x 2.5G / 4 x 10G SFP+

Copper PoE Switches



DMS-1250-10SP

8 x 2.5G PoE / 2 x 10G SFP+, 240W



DMS-1250-12TP

8 x 2.5G PoE / 2 x 10G + 2 x 10G SFP+, 240W



DMS-1250-18P

16 x 2.5G PoE / 2 x 10G SFP+, 370W



DMS-1250-28P

24 x 2.5G PoE / 4 x 10G SFP+, 475W

Standard Smart Switches / DMS-1250 Series

Model	DMS-1250-10S	DMS-1250-10SP	DMS-1250-12	DMS-1250-12TP
Product Image				
Hardware				
Number of 1G Ports				
Number of 1G Combo Ports				
Number of 1G SFP Ports				
Number of 2.5G Ports	8	8	8	8
Number of 10G Ports			2	2
Number of 10G Combo Ports				
Number of 10G SFP+ Ports	2	2	2	2
Number of 25G SFP28 Ports				
Switching Capacity	80 Gbps	80 Gbps	120 Gbps	120 Gbps
MAC Address	16 K	16 K	16 K	16 K
PoE Standards		IEEE 802.3af / at		IEEE 802.3af / at
PoE Power Budget		240W		240W
PoE Capable Ports		Port 1-8, up to 30W		Port 1-8, up to 30W
PD-ALive		✓		✓
Perpetual PoE		✓		✓
Fast PoE		✓		✓
Power Supply Type	Internal	Internal	Internal	Internal
Fan	Fanless	2 Smart Fans	1 Smart Fan	2 Smart Fans
Surge Protection	6kV	6kV	6kV	6kV
Dimension	330 x 200 x 44 mm	330 x 200 x 44 mm	440 x 210 x 44 mm	440 x 210 x 44 mm
D-Link Green, 802.3az EEE	✓	✓	✓	✓
Console Port (RJ-45)	✓	✓	✓	✓
L2				
Virtual Stacking (Device)				
Spanning Tree	STP, RSTP, MSTP	STP, RSTP, MSTP	STP, RSTP, MSTP	STP, RSTP, MSTP
G.8032 ERPS	ERPS	ERPS	ERPS	ERPS
Link Aggregation	802.3ad, 802.1AX	802.3ad, 802.1AX	802.3ad, 802.1AX	802.3ad, 802.1AX
IGMP Snooping	✓	✓	✓	✓
VLAN				
VLAN Group	4 K	4 K	4 K	4 K
Protocol-Based VLAN				
Subnet-Based VLAN				
Port-Based VLAN				
MAC VLAN				
GVRP	✓	✓	✓	✓
VLAN Translation	✓	✓	✓	✓
Asymmetric VLAN	✓	✓	✓	✓
Voice VLAN	✓	✓	✓	✓
Surveillance VLAN	ONVIF	ONVIF	ONVIF	ONVIF
ISM VLAN	✓	✓	✓	✓
Double VLAN (Q-in-Q)	✓	✓	✓	✓
Selective Q-in-Q	✓	✓	✓	✓

Model	DMS-1250-10S	DMS-1250-10SP	DMS-1250-12	DMS-1250-12TP
Product Image				
L3				
IP Interfaces	8	8	8	8
Static Route for IPv4 / IPv6	128 / 64	128 / 64	128 / 64	128 / 64
QoS				
802.1p QoS	✓	✓	✓	✓
Number of Queues per Port	8	8	8	8
Bandwidth Control (Min. Granularity)	16 Kbps	16 Kbps	16 Kbps	16 Kbps
Surveillance Mode				
Video Surveillance Mode				
ONVIF Device Discovery				
Video Surveillance Topology				
Video Surveillance Device Information				
ACL				
ACL Entry (Ingress / Egress)	Ingress	Ingress	Ingress	Ingress
VLAN-Based ACL	✓	✓	✓	✓
Time-Based ACL	✓	✓	✓	✓
Security				
SSH	✓	✓	✓	✓
TLS / SSL Support	TLS, SSL	TLS, SSL	TLS, SSL	TLS, SSL
IP-MAC-Port Binding (IMPB)	✓	✓	✓	✓
ARP Spoofing Prevention	✓	✓	✓	✓
BPDU Attack Protection				
Broadcast / Multicast / Unicast Storm Control	✓	✓	✓	✓
AAA				
802.1X Access Control	✓	✓	✓	✓
RADIUS	✓	✓	✓	✓
TACACS+	✓	✓	✓	✓
Management				
SNMP	v1 / v2c / v3	v1 / v2c / v3	v1 / v2c / v3	v1 / v2c / v3
RMON v1 / v2	v1 / v2	v1 / v2	v1 / v2	v1 / v2
sFlow				
OAM (802.3ah, 802.1ag, ITU-T Y.1731)				
Command Line Interface (CLI)	Full	Full	Full	Full
Web-Based GUI	✓	✓	✓	✓

Standard Smart Switches / DMS-1250 Series

Model	DMS-1250-18	DMS-1250-18P	DMS-1250-28	DMS-1250-28P
Product Image				
Hardware				
Number of 1G Ports				
Number of 1G Combo Ports				
Number of 1G SFP Ports				
Number of 2.5G Ports	16	16	24	24
Number of 10G Ports				
Number of 10G Combo Ports				
Number of 10G SFP+ Ports	2	2	4	4
Number of 25G SFP28 Ports				
Switching Capacity	120 Gbps	120 Gbps	200 Gbps	200 Gbps
MAC Address	16 K	16 K	32 K	16 K
PoE Standards		IEEE 802.3af / at / bt		IEEE 802.3af / at / bt
PoE Power Budget		370W		475W
PoE Capable Ports		Port 1-16, up to 90W		Port 1-24, up to 90W
PD-ALive		✓		✓
Perpetual PoE		✓		✓
Fast PoE		✓		✓
Power Supply Type	Internal	Internal	Internal	Internal
Fan	Fanless	3 Smart Fans	2 Smart Fans	4 Smart Fans
Surge Protection	6kV	6kV	6kV	6kV
Dimension	440 x 250 x 44 mm	440 x 250 x 44 mm	440 x 250 x 44 mm	440 x 250 x 44 mm
D-Link Green, 802.3az EEE	✓	✓	✓	✓
Console Port (RJ-45)	✓	✓	✓	✓
L2				
Virtual Stacking (Device)				
Spanning Tree	STP, RSTP, MSTP	STP, RSTP, MSTP	STP, RSTP, MSTP	STP, RSTP, MSTP
G.8032 ERPS	ERPS	ERPS	ERPS	ERPS
Link Aggregation	802.3ad, 802.1AX	802.3ad, 802.1AX	802.3ad, 802.1AX	802.3ad, 802.1AX
IGMP Snooping	✓	✓	✓	✓
VLAN				
VLAN Group	4 K	4 K	4 K	4 K
Protocol-Based VLAN				
Subnet-Based VLAN				
Port-Based VLAN				
MAC VLAN				
GVRP	✓	✓	✓	✓
VLAN Translation	✓	✓	✓	✓
Asymmetric VLAN	✓	✓	✓	✓
Voice VLAN	✓	✓	✓	✓
Surveillance VLAN	ONVIF	ONVIF	ONVIF	ONVIF
ISM VLAN	✓	✓	✓	✓
Double VLAN (Q-in-Q)	✓	✓	✓	✓
Selective Q-in-Q	✓	✓	✓	✓

Model	DMS-1250-18	DMS-1250-18P	DMS-1250-28	DMS-1250-28P
Product Image				
L3				
IP Interfaces	8	8	8	8
Static Route for IPv4 / IPv6	128 / 64	128 / 64	128 / 64	128 / 64
QoS				
802.1p QoS	✓	✓	✓	✓
Number of Queues per Port	8	8	8	8
Bandwidth Control (Min. Granularity)	16 Kbps	16 Kbps	16 Kbps	16 Kbps
Surveillance Mode				
Video Surveillance Mode				
ONVIF Device Discovery				
Video Surveillance Topology				
Video Surveillance Device Information				
ACL				
ACL Entry (Ingress / Egress)	Ingress	Ingress	Ingress	Ingress
VLAN-Based ACL	✓	✓	✓	✓
Time-Based ACL	✓	✓	✓	✓
Security				
SSH	✓	✓	✓	✓
TLS / SSL Support	TLS, SSL	TLS, SSL	TLS, SSL	TLS, SSL
IP-MAC-Port Binding (IMPB)	✓	✓	✓	✓
ARP Spoofing Prevention	✓	✓	✓	✓
BPDU Attack Protection				
Broadcast / Multicast / Unicast Storm Control	✓	✓	✓	✓
AAA				
802.1X Access Control	✓	✓	✓	✓
RADIUS	✓	✓	✓	✓
TACACS+	✓	✓	✓	✓
Management				
SNMP	v1 / v2c / v3	v1 / v2c / v3	v1 / v2c / v3	v1 / v2c / v3
RMON v1 / v2	v1 / v2	v1 / v2	v1 / v2	v1 / v2
sFlow				
OAM (802.3ah, 802.1ag, ITU-T Y.1731)				
Command Line Interface (CLI)	Full	Full	Full	Full
Web-Based GUI	✓	✓	✓	✓

DXS-1250 Series

10G Layer 2 Standard Smart

10G downlink with 25G SFP28 uplink
PoE models support up to 60W / port



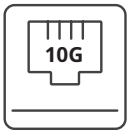

10GE downlink

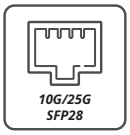

SFP28 Uplink



ERPS



Q-in-Q
VLAN Segregation

Advanced Hardware

IEEE 802.3bt (60W) or 802.3af / at compliant
Fast and perpetual PoE
6kV surge protection on all PoE Ethernet access ports
ERPS

Management

Nuclias Unity
Nuclias Network Controller
Command Line Interface (CLI)
Web-based GUI

L3

Routing Protocol
IPv4 / IPv6 static route
IPv4 ARP entries
IPv6 ND entries
Proxy ARP
IP interface

L2

Features / Security
802.1AX / 802.3ad link aggregation
IGMP v1 / v2 / v3 Snooping, MLD v1 / v2 snooping
Port security
SSL / SSH security
Access Control List (ACL)
802.1P Quality of Service (QoS)
Q-in-Q, selective Q-in-Q



Standard Smart Switches / DXS-1250 Series

Model	DXS-1250-28YP
Product Image	
Hardware	
Number of 1G Ports	
Number of 1G Combo Ports	
Number of 1G SFP Ports	
Number of 2.5G Ports	
Number of 10G Ports	24
Number of 10G Combo Ports	
Number of 10G SFP+ Ports	
Number of 25G SFP28 Ports	4
Switching Capacity	680 Gbps
MAC Address	32 K
PoE Standards	IEEE 802.3af / at / bt
PoE Power Budget	470W
PoE Capable Ports	Port 1-24, up to 60W
PD-ALive	✓
Perpetual PoE	✓
Fast PoE	✓
Power Supply Type	Internal
Fan	2 Smart Fans
Surge Protection	
Dimension	440 x 470 x 44 mm
D-Link Green, 802.3az EEE	✓
Console Port (RJ-45)	✓
L2	
Virtual Stacking (Device)	
Spanning Tree	STP, RSTP, MSTP
G.8032 ERPS	ERPS
Link Aggregation	802.3ad, 802.1AX
IGMP Snooping	✓
VxLAN	
VLAN	
VLAN Group	4 K
Protocol-Based VLAN	✓
Subnet-Based VLAN	
Port-Based VLAN	
MAC VLAN	✓
GVRP	✓
VLAN Translation	
Asymmetric VLAN	✓
Voice VLAN	✓
Surveillance VLAN	ONVIF
ISM VLAN	✓
Double VLAN (Q-in-Q)	✓
Selective Q-in-Q	✓

Model	DXS-1250-28YP
Product Image	
L3	
IP Interfaces	8
Static Route for IPv4 / IPv6	128 / 64
QoS	
802.1p QoS	✓
Number of Queues per Port	8
Bandwidth Control (Min. Granularity)	8 Kbps
Surveillance Mode	
Video Surveillance Mode	
ONVIF Device Discovery	
Video Surveillance Topology	
Video Surveillance Device Information	
ACL	
ACL Entry (Ingress / Egress)	Ingress / Egress
VLAN-Based ACL	✓
Time-Based ACL	✓
Security	
SSH	✓
TLS / SSL Support	TLS, SSL
IP-MAC-Port binding (IMPB)	✓
ARP Spoofing Prevention	✓
BPDU Attack Protection	✓
Broadcast / Multicast / Unicast Storm Control	✓
AAA	
802.1X Access Control	✓
RADIUS	✓
TACACS+	✓
Management	
SNMP	v1 / v2c / v3
RMON v1 / v2	v1 / v2
sFlow	✓
OAM (802.3ah, 802.1ag, ITU-T Y.1731)	✓
Command Line Interface (CLI)	Full
Web-Based GUI	✓

Easy Smart Switches

Easy Control, Smart Performance



Easy Management

IGMP Snooping

Loopback Detection

Traffic Segmentation

Green Ethernet

Fanless Design

Cable Diagnostics

Centralized Management

Easy Smart switches serve as an optimal upgrade from unmanaged switches, connecting client devices with ports scaling from 5 to 26. They provide a cost-effective solution for businesses of all sizes needing straightforward network management. The Easy Smart series is a range of switches designed to meet the requirements of small, medium, and enterprise businesses.

Designed specifically for small and midsize business networks that require simple network management, the Easy Smart switch offers network monitoring for users to observe traffic behavior. With advanced security features such as static MAC, storm control, and IGMP snooping, it can identify and even locate connection problems on a business network.

Explore the Possibilities

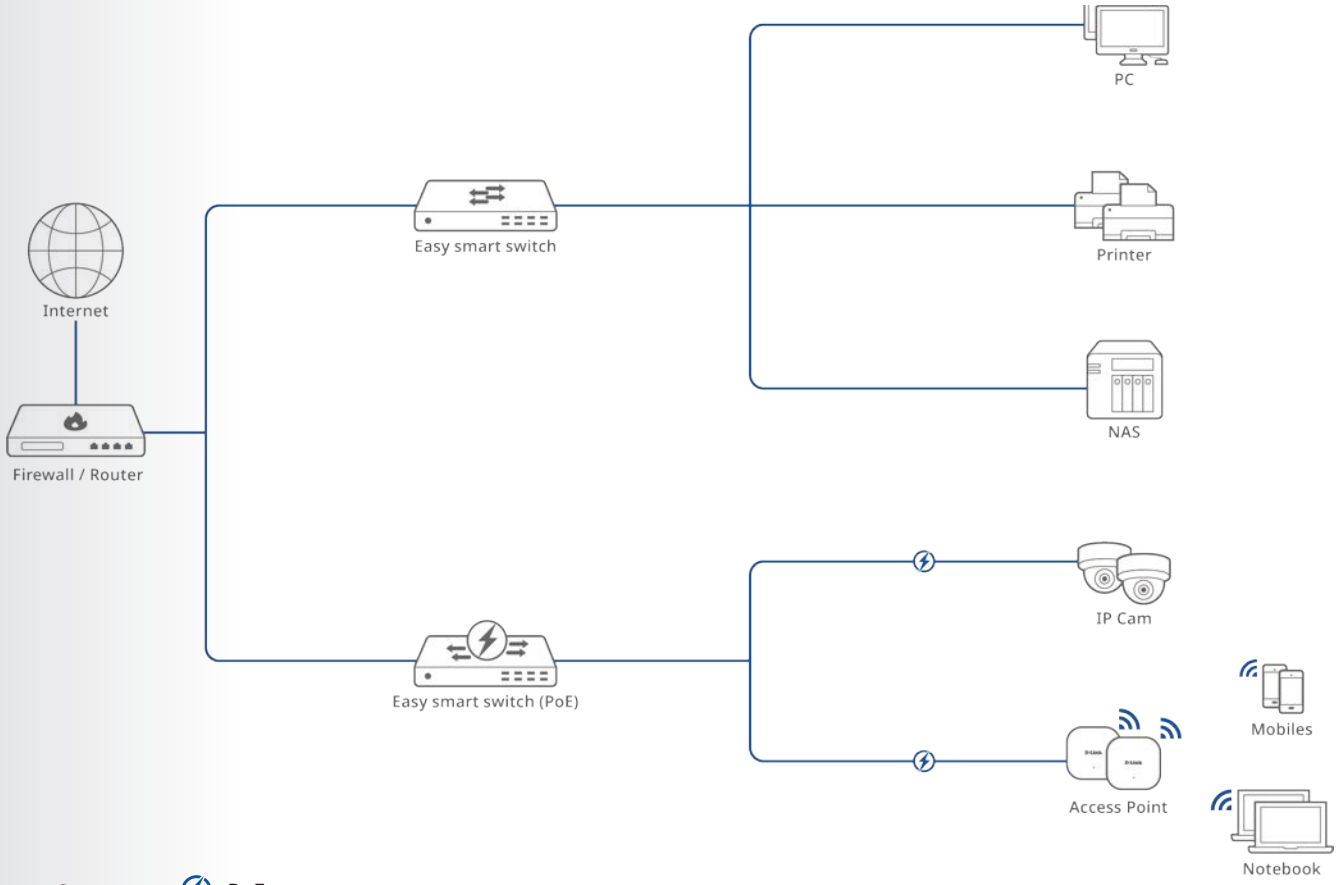

Copper PoE

Copper Switches

- Cost-effective solution with 5 to 24 ports
- Supports 1000BASE-T speeds
- Ideal for computers, printers, NAS and IoT devices

Series	Model	Description
DGS-1100	DGS-1100-05V2	5 Ports 1G Easy Smart Switch
	DGS-1100-08V2	8 Ports 1G Easy Smart Switch
	DGS-1100-16V2	16 Ports 1G Easy Smart Switch
	DGS-1100-24V2	24 Ports 1G Easy Smart Switch
DMS-F100	DMS-F106TS	5 Ports 2.5G + 1 Port 10G SFP+ Easy Smart Switch
	DMS-F109TS	8 Ports 2.5G + 1 Port 10G SFP+ Easy Smart Switch

Copper PoE Switches

- Compliant with IEEE 802.3af/at standards
- Up to 370W total PoE power budget
- Easy setup with no complex configuration required for powered devices

Series	Model	Description
DGS-1100	DGS-1100-08PV2	8 Ports 1G PoE+ Easy Smart Switch, 64W
	DGS-1100-18PV2	16 Ports 1G PoE+ and 2 Ports 1G Combo PoE Easy Smart Switch, 130W
	DGS-1100-24PV2	12 Ports 1G PoE+ + 12 Ports 1G Easy Smart Switch, 100W
	DGS-1100-26MPV2	24 Ports 1G PoE+ + 2 Ports 1G Combo Easy Smart Switch, 370W
DGS-F1100	DGS-F1100-10PS-E	8 Ports 1G PoE+ + 2 Ports 1G SFP Easy Smart Switch, 96W
DMS-F100	DMS-F109TP	8 Ports 2.5G PoE+ + 1 Port 10G SFP+ Easy Smart Switch, 135W



Copper Switches



DGS-1100-05V2

5 x 1G



DGS-1100-08V2

8 x 1G



DGS-1100-16V2

16 x 1G



DGS-1100-24V2

24 x 1G

Copper PoE Switches



DGS-1100-08PV2

8 x 1G PoE, 64W



DGS-1100-18PV2

16 x 1G PoE / 2 x 1G Combo PoE, 130W



DGS-1100-10MPV2

8 x 1G PoE / 2 x 1G SFP, 130W



DGS-1100-24PV2

12 x 1G PoE + 12 x 1G, 100W

Easy Smart Switches / DGS-1100 Series

Model	DGS-1100-05V2	DGS-1100-08V2	DGS-1100-08PV2	DGS-1100-16V2
Product Image				
Hardware				
Number of 1G Ports	5	8	8	16
Number of 1G SFP Ports				
Number of 2.5G Ports				
Number of 10G Ports				
Number of 10G SFP+ Ports				
Switching Capacity	10 Gbps	16 Gbps	16 Gbps	32 Gbps
MAC Address	2 K	4 K	4 K	8 K
PoE Standards			IEEE 802.3af / at	
PoE Power Budget			64W	
PoE Capable Ports			Port 1-8, up to 30W	
PD-ALive			✓	
Perpetual PoE				
Fast PoE				
Power Supply Type	External	External	External	Internal
Fan	Fanless	Fanless	Fanless	Fanless
Surge Protection	1kV	1kV	1kV	1kV
Dimension	101 × 82 × 28 mm	171 × 98 × 29 mm	145 × 82 × 28 mm	280 x 180 x 44 mm
D-Link Green, 802.3az EEE	✓	✓	✓	✓
L2				
Spanning Tree	STP, RSTP	STP, RSTP	STP, RSTP	STP, RSTP
Link Aggregation	Static Port Trunking only	Static Port Trunking only	Static Port Trunking only	802.3ad, 802.1AX
IGMP Snooping	✓	✓	✓	✓
VLAN				
VLAN Group	32 K	32 K	32 K	128 K
Asymmetric VLAN	✓	✓	✓	✓
Voice VLAN	✓	✓	✓	✓
Surveillance VLAN	✓	✓	✓	✓
QoS				
802.1p QoS	✓	✓	✓	✓
Number of Queues per Port	4	4	4	8
Bandwidth Control (Min. Granularity)	8 Kbps	8 Kbps	8 Kbps	16 Kbps
Security				
SSH				
TLS / SSL Support				SSL
IP-MAC-Port Binding (IMPB)				
ARP Spoofing Prevention				
BPDU Attack Protection				
Broadcast / Multicast / Unicast Storm Control	✓	✓	✓	✓
AAA				
802.1X Access Control				
RADIUS				
TACACS+				
Management				
SNMP	v1 / v2c	v1 / v2c	v1 / v2c	v1 / v2c
RMON v1 / v2				
Web-Based GUI	✓	✓	✓	✓

Model	DGS-1100-18PV2	DGS-1100-24V2	DGS-1100-24PV2	DGS-1100-26MPV2
Product Image				
Hardware				
Number of 1G Ports	16	24	24	24
Number of 1G Combo Ports	2			2
Number of 2.5G Ports				
Number of 10G Ports				
Number of 10G SFP+ Ports				
Switching Capacity	36 Gbps	48 Gbps	48 Gbps	52 Gbps
MAC Address	8 K	8 K	8 K	8 K
PoE Standards	IEEE 802.3af/at		IEEE 802.3af / at	IEEE 802.3af / at
PoE Power Budget	130W		100W	370W
PoE Capable Ports	Ports 1-16, up to 30W		Port 1-12, up to 30W	Port 1-24, up to 30W
PD-ALive	✓		✓	✓
Perpetual PoE				
Fast PoE				
Power Supply Type	Internal	Internal	Internal	Internal
Fan	1 x Smart Fan	Fanless	Fanless	2 Smart Fans
Surge Protection	1kV	1kV	1kV	1kV
Dimension	280 x 230 x 44 mm	280 x 180 x 44 mm	280 x 230 x 44 mm	440 x 208 x 44 mm
D-Link Green, 802.3az EEE	✓	✓	✓	✓
L2				
Spanning Tree	STP, RSTP	STP, RSTP	STP, RSTP	STP, RSTP
Link Aggregation	802.3ad, 802.1AX	802.3ad, 802.1AX	802.3ad, 802.1AX	802.3ad, 802.1AX
IGMP Snooping	✓	✓	✓	✓
VLAN				
VLAN Group	128 K	128 K	128 K	128 K
Asymmetric VLAN	✓	✓	✓	✓
Voice VLAN	✓	✓	✓	✓
Surveillance VLAN	✓	✓	✓	✓
QoS				
802.1p QoS	✓	✓	✓	✓
Number of Queues per Port	8	8	8	8
Bandwidth Control (Min. Granularity)	16 Kbps	16 Kbps	16 Kbps	16 Kbps
Security				
SSH				
TLS / SSL Support	SSL	SSL	SSL	SSL
IP-MAC-Port Binding (IMPB)				
ARP Spoofing Prevention				
BPDU Attack Protection				
Broadcast / Multicast / Unicast Storm Control	✓	✓	✓	✓
AAA				
802.1X Access Control				
RADIUS				
TACACS+				
Management				
SNMP	v1 / v2c	v1 / v2c	v1 / v2c	v1 / v2c
RMON v1 / v2				
Web-Based GUI	✓	✓	✓	✓

DGS-F1100 Series

1G Layer 2 Easy Smart

250m Long Distance PoE



Easy Management

IGMP Snooping

250m Long Distance PoE

SNMP Management

Advanced Hardware

DIP switches to toggle:
- Port Isolation
- PoE Extend
- PD Alive
- QoS

Fanless design for silent operation

6kV surge protection

Management

Web-based GUI

L2

Features / Security

STP, RSTP

IGMP snooping

VLAN

Broadcast / multicast / unknown unicast storm control

SSL

Model	DGS-F1100-10PS-E
Product Image	
Hardware	
Number of 1G Ports	8
Number of 1G SFP Ports	2
Number of 2.5G Ports	–
Number of 10G Ports	–
Number of 10G SFP+ Ports	–
Switching Capacity	20 Gbps
MAC Address	8K
PoE Standards	IEEE 802.3af / at
PoE Power Budget	96W
PoE Capable Ports	Ports 1-8, up to 30W
PD-ALive	✓
Power Supply Type	External
Fan	Fanless
Surge Protection	6kV
Dimension	228 x 121 x 37 mm
D-Link Green, 802.3az EEE	✓
DIP Switch	Port Isolation / Extend / PD Alive / QoS
L2	
Spanning Tree	STP, RSTP, MSTP
Link Aggregation	802.3ad
IGMP Snooping	✓
VLAN	
VLAN Group	4K
Asymmetric VLAN	–
Voice VLAN	✓
Surveillance VLAN	ONVIF
QoS	
802.1p QoS	✓
Number of Queues per Port	8
Bandwidth Control (Min. Granularity)	8 Kbps
Security	
SSH	✓
TLS / SSL Support	✓
IP-MAC-Port Binding (IMPB)	✓
ARP Spoofing Prevention	✓
BPDU Attack Protection	✓
Broadcast / Multicast / Unicast Storm Control	✓
AAA	
802.1X Access Control	✓
RADIUS	✓
TACACS+	✓
Management	
SNMP	v1 / v2c / v3
RMON v1 / v2	✓
Web-Based GUI	✓

DMS-F100 Series

2.5G Layer 2 Easy Smart

2.5G downlink with 10G SFP+ uplink
PoE models support up to 30W / port



2.5GE Downlinks



Easy Management

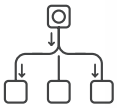

IGMP Snooping



Loopback Detection

Advanced Hardware

Fanless design for silent operation

Management

Web-based GUI

L2

Features / Security

STP, RSTP

IGMP snooping

VLAN

Broadcast / multicast / unknown unicast storm control

QoS

Model	DMS-F106TS	DMS-F109TS	DMS-F109TP
Product Image			
Hardware			
Number of 1G Ports	–	–	–
Number of 1G SFP Ports	–	–	–
Number of 2.5G Ports	5	8	8
Number of 10G Ports	-	-	-
Number of 10G SFP+ Ports	1	1	1
Switching Capacity	45 Gbps	60 Gbps	60 Gbps
MAC Address	4K	4K	4K
PoE Standards	–	–	IEEE 802.3af / at
PoE Power Budget	–	–	135W
PoE Capable Ports	–	–	Ports 1-8, up to 30W
PD-ALive	–	–	-
Power Supply Type	External	External	Internal
Fan	Fanless	Fanless	Fanless
Surge Protection	6kV	6kV	4kV
Dimension	140 x 93 x 28 mm	190 x 100 x 28 mm	268 x 181 x 44 mm
D-Link Green, 802.3az EEE	–	–	–
L2			
Spanning Tree	STP, RSTP	STP, RSTP	STP, RSTP
Link Aggregation	802.3ad	802.3ad	802.3ad
IGMP Snooping	✓	✓	✓
Loopback Detection	✓	✓	✓
VLAN			
VLAN Group	4K/Maximum active 31	4K/Maximum active 31	4K/Maximum active 31
Asymmetric VLAN	–	–	–
Voice VLAN	–	–	–
Surveillance VLAN	–	–	–
QoS			
802.1p QoS	✓	✓	✓
Number of Queues per Port	8	8	8
Bandwidth Control (Min. Granularity)	8 Kbps	8 Kbps	8 Kbps
Security			
SSH	–	–	–
TLS / SSL Support	–	–	–
IP-MAC-Port Binding (IMPB)	–	–	–
ARP Spoofing Prevention	–	–	–
BPDU Attack Protection	–	–	–
Broadcast / Multicast / Unicast Storm Control	✓	✓	✓
AAA			
802.1X Access Control	–	–	–
RADIUS	–	–	–
TACACS+	–	–	–
Management			
SNMP	–	–	–
RMON v1 / v2	–	–	–
Web-Based GUI	✓	✓	✓



Unmanaged Switches

Plug-and-Play Simplicity, Versatile Edge Connectivity

IGMP Snooping

Quality of Service

Fanless Design

Plug and Play

Cable Diagnostics

Easy Maintenance

Energy Saving

802.3x Flow Control

PoE Plug and Play

Compliant with IEEE 802.3 standard

Extended Connectivity

PoE Overload Protection

Designed for plug-and-play convenience without complex configuration, the unmanaged switches provide cost-effective solutions for network expansion based on various scenarios. They offer instant connectivity for home and small office users with no management required. The unmanaged switches are available in 10/100M, 1G and 2.5G speeds with durable metal casing or lightweight plastic design to meet different business requirements.

Explore the Possibilities

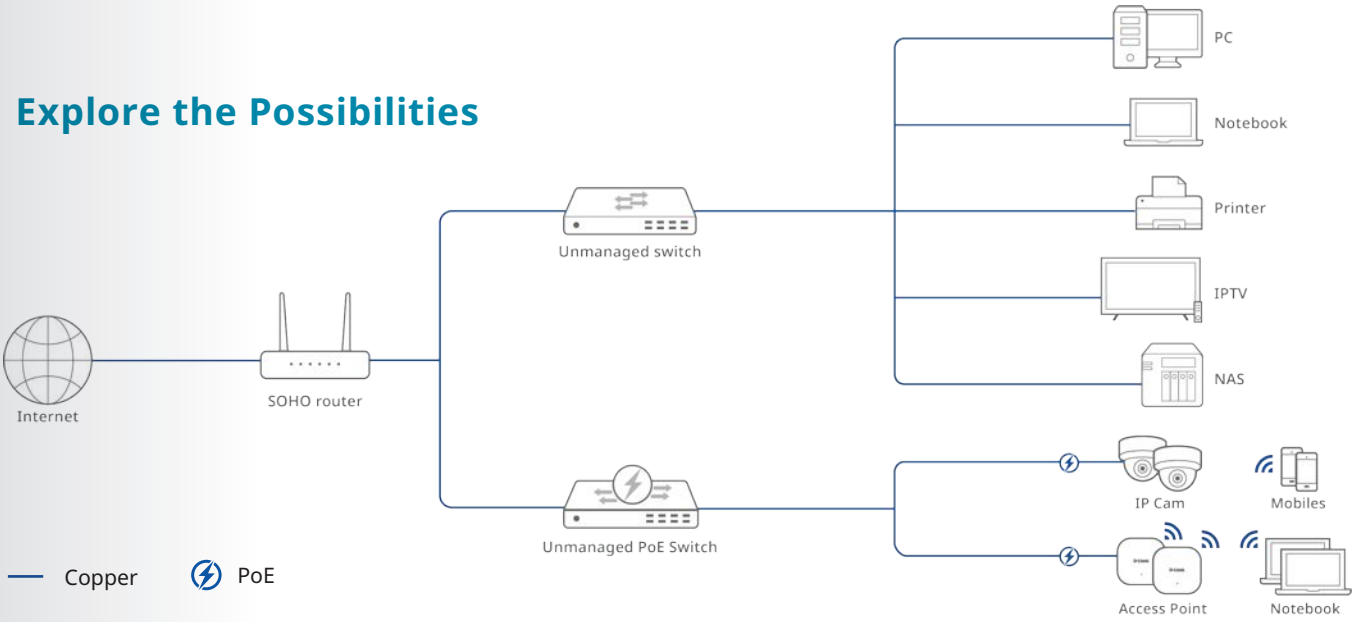

Copper Switches

- Diverse port options and speeds for homes and small offices
- QoS and flow control for reliable connectivity
- IEEE 802.3az EEE for energy saving

Series	Model	Description
DES-1000	DES-1005C	5 Ports 10 / 100 Mbps Unmanaged Switch
	DES-1008C	8 Ports 10 / 100 Mbps Unmanaged Switch
	DES-1016A	16 Ports 10 / 100 Mbps Unmanaged Switch
	DES-1016D	16 Ports 10 / 100 Mbps Unmanaged Switch
	DES-1024D	24 Ports 10 / 100 Mbps Unmanaged Switch
DGS-1000	DGS-105	5 Ports 1G Unmanaged Switch
	DGS-105GL	5 Ports 1G Unmanaged Switch
	DGS-1005A	5 Ports 1G Unmanaged Switch
	DGS-F105	5 Ports 1G Unmanaged Switch
	DGS-F105M	5 Ports 1G Unmanaged Switch
	DGS-F1005A	5 Ports 1G Unmanaged Switch
	DGS-108	8 Ports 1G Unmanaged Switch
	DGS-108GL	8 Ports 1G Unmanaged Switch
	DGS-1008A	8 Ports 1G Unmanaged Switch
	DGS-F108	8 Ports 1G Unmanaged Switch
	DGS-F108M	8 Ports 1G Unmanaged Switch
	DGS-F1008A	8 Ports 1G Unmanaged Switch
	DGS-1016D	16 Ports 1G Unmanaged Switch
	DGS-1016S	16 Ports 1G Unmanaged Switch
	DGS-F1016	16 Ports 1G Unmanaged Switch
	DGS-1024D	24 Ports 1G Unmanaged Switch
	DGS-F1024	24 Ports 1G Unmanaged Switch
DMS-1000	DMS-105	5 Ports 2.5G Unmanaged Switch
	DMS-107	5 Ports 1G + 2 Ports 2.5G Unmanaged Switch
	DMS-108	8 Ports 2.5G Unmanaged Switch
	DMS-1016	16 Ports 2.5G Unmanaged Switch
	DMS-1024	24 Ports 2.5G Unmanaged Switch

Copper PoE Switches

- Diverse PoE standards, from PoE+ to PoE++ (90W)
- Auto-detects PoE devices and power allocation
- Green Power for energy and cost savings

Series	Model	Description
DES-F1000	DES-F1006P-E	6 Ports 10/100 Long Range PoE+ Switch, 60W
	DES-F1010P-E	10 Ports 10/100 Long Range PoE+ Switch, 96W
	DES-F1016P-E	16 Ports 10/100 Long Range PoE+ + 1 Port 1G + 1 Port 1G Combo Switch, 150W
DGS-F1000	DGS-F1006P-E	6 Ports 1G Long-Range PoE+ Switch, 60W
	DGS-F1010P-E	10 Ports 1G Long-Range PoE+ Switch, 96W
	DGS-F1016P	16 Ports 1G PoE+ + 2 Ports 1G SFP Unmanaged Switch
	DGS-F1024P	24 Ports 1G PoE+ + 2 Ports 1G SFP Unmanaged Switch
	DGS-F1026P-E	24 Ports 1G Long-Range PoE+ Unmanaged Switch, 250W
DMS-1000	DMS-108P	8 Ports 2.5G PoE++ Unmanaged Switch, 230W

Unmanaged Switches / DES-1000 Series

Model	DES-1005C	DES-1008C	DES-1016A	DES-1016D	DES-1024D
Product Image					
Hardware					
Number of 10 / 100 Mbps Ports	5	8	16	16	24
Number of 1G Ports					
Number of 1G Combo Ports					
Number of 1G SFP Ports					
Number of 2.5G Ports					
Switching Capacity	1 Gbps	1.6 Gbps	3.2 Gbps	3.2 Gbps	4.8 Gbps
MAC Address	2K	2K	8 K	8 K	8 K
PoE Standards					
PoE Power Budget					
PoE Capable Ports					
PD-ALive					
Power Supply Type	External	External	External	Internal	Internal
Fan	Fanless	Fanless	Fanless	Fanless	Fanless
Dimension	88 x 48 x 21.45 mm	131 x 54 x 21 mm	155.7 x 122 x 41 mm	280 x 126 x 44 mm	280 x 126 x 44 mm
DIP Switch					
D-Link Green, 802.3az EEE			✓	✓	✓
L2					
IGMP Snooping					
QoS					
802.1p QoS			✓	✓	✓

Unmanaged Long Range Switches / DES-F1000 Series

Model	DES-F1006P-E	DES-F1010P-E	DES-F1016P-E
Product Image			
Hardware			
Number of 10 / 100 Mbps Ports	6	10	16
Number of 1G Ports			1
Number of 1G Combo Ports			1
Number of 1G SFP Ports			
Number of 2.5G Ports			
Switching Capacity	1.2 Gbps	2 Gbps	7.2 Gbps
MAC Address	1K	1K	8K
PoE Standards	IEEE 802.3af / at	IEEE 802.3af / at	IEEE 802.3af / at
PoE Power Budget	60W	96W	150W
PoE Capable Ports	Port 1-4, up to 30W	Port 1-8, up to 30W	Port 1-16, up to 30W
PD-ALive	✓	✓	✓
Power Supply Type	Internal	Internal	Internal
Fan	Fanless	Fanless	1 Fan
Dimension	190 x 131 x 40 mm	210 x 151 x 40 mm	285 x 180 x 44 mm
DIP Switch	Port Isolation / Extend / PD Alive / QoS	Port Isolation / Extend / PD Alive / QoS	Port Isolation / Extend / PD Alive / QoS
D-Link Green, 802.3az EEE	✓	✓	✓
L2			
IGMP Snooping			
QoS			
802.1p QoS	✓	✓	✓

Unmanaged Switches / DGS-1000 Series

Model	DGS-105	DGS-105GL	DGS-1005A	DGS-F105	DGS-F105M	DGS-F1005A
Product Image						
Hardware						
Number of 10 / 100 Mbps Ports						
Number of 1G Ports	5	5	5	5	5	5
Number of 1G Combo Ports						
Number of 1G SFP Ports						
Number of 2.5G Ports						
Switching Capacity	10 Gbps	10 Gbps	10 Gbps	10 Gbps	10 Gbps	10 Gbps
MAC Address	2 K	2 K	2 K	2K	2K	2K
PoE Standards						
PoE Power Budget						
PoE Capable Ports						
PD-ALive						
Power Supply Type	External	External	External	External	External	External
Fan	Fanless	Fanless	Fanless	Fanless	Fanless	Fanless
Dimension	100 x 64 x 24 mm	91 x 85 x 23 mm	94 x 75 x 23 mm	100 x 65 x 22.5 mm	100 x 65 x 22.5 mm	101 x 67 x 23.5 mm
DIP Switch						
D-Link Green, 802.3az EEE	✓	✓	✓	✓	✓	✓
IGMP Snooping	✓		✓	✓	✓	✓
QoS						
802.1p QoS	✓	✓	✓	✓	✓	✓

Model	DGS-108	DGS-108GL	DGS-1008A	DGS-F108	DGS-F108M	DGS-F1008A
Product Image						
Hardware						
Number of 10 / 100 Mbps Ports						
Number of 1G Ports	8	8	8	8	8	8
Number of 1G Combo Ports						
Number of 1G SFP Ports						
Number of 2.5G Ports						
Switching Capacity	16 Gbps	16 Gbps	16 Gbps	16 Gbps	16 Gbps	16 Gbps
MAC Address	8 K	4 K	4 K	2K	2K	2K
PoE Standards						
PoE Power Budget						
PoE Capable Ports						
PD-ALive						
Power Supply Type	External	External	External	External	External	External
Fan	Fanless	Fanless	Fanless	Fanless	Fanless	Fanless
Dimension	140 x 76 x 27.7 mm	139 x 85 x 23 mm	127 x 67 x 20 mm	138 x 78 x 25 mm	138 x 78 x 25 mm	139 x 80 x 25mm
DIP Switch						
D-Link Green, 802.3az EEE	✓	✓	✓	✓	✓	✓
L2						
IGMP Snooping	✓		✓	✓	✓	✓
QoS						
802.1p QoS	✓	✓	✓	✓	✓	✓

Unmanaged Switches / DGS-1000 Series

Model	DGS-1016D	DGS-1016S	DGS-F1016	DGS-F1016P	DGS-1024D	DGS-F1024	DGS-F1024P
Product Image							
Hardware							
Number of 1G Ports	16	16	16	16	24	24	24
Number of 1G SFP Ports				2			2
Switching Capacity	32 Gbps	32 Gbps	32 Gbps	52 Gbps	48 Gbps	48 Gbps	52 Gbps
MAC Address	8 K	8 K	8K	8K	8 K	8K	8K
PoE Standards				IEEE 802.3af / at			IEEE 802.3af / at
PoE Power Budget				350W			350W
PoE Capable Ports				Port 1-16, up to 30W			Port 1-24, up to 30W
Power Supply Type	Internal	External	External	Internal	Internal	Internal	Internal
Fan	Fanless	Fanless	Fanless	1 Fan	Fanless	Fanless	1 Fan
Dimension	280 x 126 x 44 mm	280 x 110 x 25 mm	320 x 180 x 44 mm	320 x 180 x 44 mm	280 x 180 x 44 mm	440 x 181 x 44 mm	440 x 181 x 44 mm
DIP Switch	Normal / Flow Control Off / Port Isolation				Normal / Flow Control Off / Port Isolation		
D-Link Green, 802.3az EEE	✓	✓	✓	✓	✓	✓	✓
QoS							
802.1p QoS	✓	✓	✓	✓	✓	✓	✓

Unmanaged Long Range Switches / DGS-F1000 Series

Model	DGS-F1006P-E	DGS-F1010P-E	DGS-F1026P-E
Product Image			
Hardware			
Number of 10 / 100 Mbps Ports			
Number of 1G Ports	6	10	24
Number of 1G Combo Ports			
Number of 1G SFP Ports			2
Number of 2.5G Ports			
Switching Capacity	12 Gbps	20 Gbps	52 Gbps
MAC Address	2K	2K	8K
PoE Standards	IEEE 802.3af / at	IEEE 802.3af / at	IEEE 802.3af / at
PoE Power Budget	60W	96W	250W
PoE Capable Ports	Port 1-4, up to 30W	Port 1-8, up to 30W	Port 1-24, up to 30W
PD-ALive	✓	✓	✓
Power Supply Type	Internal	Internal	Internal
Fan	Fanless	Fanless	1 Fan
Dimension	190 x 131 x 40 mm	190 x 131 x 40 mm	440 x 180 x 44 mm
DIP Switch	Port Isolation / Extend / PD Alive / QoS	Port Isolation / Extend / PD Alive / QoS	Port Isolation / Extend / PD Alive / QoS
D-Link Green, 802.3az EEE	✓	✓	✓
L2			
IGMP Snooping			
QoS			
802.1p QoS	✓	✓	✓

Unmanaged Switches / DMS-1000 Series

Model	DMS-105	DMS-107	DMS-108
Product Image			
Hardware			
Number of 10 / 100 Mbps Ports			
Number of 1G Ports		5	
Number of 1G Combo Ports			
Number of 1G SFP Ports			
Number of 2.5G Ports	5	2	8
Switching Capacity	25 Gbps	20 Gbps	40 Gbps
MAC Address	4 K	2 K	4 K
PoE Standards			
PoE Power Budget			
PoE Capable Ports			
PD-ALive			
Power Supply Type	External	External	External
Fan	Fanless	Fanless	Fanless
Dimension	101 x 82 x 28 mm	145 x 82 x 28 mm	145 x 82 x 28mm
DIP Switch			
D-Link Green, 802.3az EEE	✓	✓	✓
L2			
IGMP Snooping	✓	✓	✓
QoS			
802.1p QoS	✓	✓	✓

Model	DMS-108P	DMS-1016	DMS-1024
Product Image			
Hardware			
Number of 10 / 100 Mbps Ports			
Number of 1G Ports			
Number of 1G Combo Ports			
Number of 1G SFP Ports			
Number of 2.5G Ports	8	16	24
Switching Capacity	40 Gbps	80 Gbps	120 Gbps
MAC Address	4 K	16 K	32 K
PoE Standards	IEEE 802.3af / at / bt		
PoE Power Budget	230W		
PoE Capable Ports	Port 1-8, up to 90W		
PD-ALive			
Power Supply Type	External	Internal	Internal
Fan	Fanless	Fanless	2 x Smart Fans
Dimension	190 x 120 x 38 mm	441 x 250 x 44 mm	441 x 250 x 44 mm
DIP Switch			
D-Link Green, 802.3az EEE	✓	✓	✓
L2			
IGMP Snooping	✓	✓	✓
QoS			
802.1p QoS	✓	✓	✓

Transceivers

The DEM series is a range of optical fiber modules designed for long-distance transmission and high-speed communication over single-mode or multi-mode fibers. They are tailored to meet the demands of your specific network environment. These modules are compatible with various switch series and offer a wide selection of data rates, including 1G, 10G, 25G, and 100G, as well as diverse transmission distance options.

Single-Mode



10 km

DEM-310GT 1G



50 km

DEM-314GT 1G



10 km

DEM-432XT 10G



10 km

DEM-S2810LR 25G



10 km

DEM-Q2810Q-LR4 100G

Multi-Mode



550 m

DEM-311GT 1G



300 m

DEM-431XT 10G



100 m

DEM-S2801SR 25G



100 m

DEM-Q2801Q-SR4 100G

Ethernet



100 m

DGS-712 1G



30 m

DEM-410T 10G

RPS and Accessories

The DPS series is redundant power supplies designed to supply power to D-Link switches. This series is designed to be mounted into a standard rack and provide an affordable solution for backup power to enhance the primary power supply which are built into the switches.

PoE Modular RPS



DPS-700, 589W

Compatible Models:
Refer to the product datasheet for the supported models.

Modular RPS



DPS-200A, 60W

Compatible Models:
Refer to the product datasheet for the supported models.



DPS-500A, 140W

Compatible Models:
Refer to the product datasheet for the supported models.



DPS-500DC, 140W

Compatible Models:
Refer to the product datasheet for the supported models.



DPS-100

Compatible Models:
Refer to the product datasheet for the supported models.



DPS-520, 180W

Compatible Models:

- DGS-1520 non-PoE switches

Accessories



DPS-CB150-2PS

Cable for DPS-200A, DPS-500A, DPS-500DC



DPS-800

Chassis for DPS-200A, DPS-500A, DPS-500DC

Direct Attach Cables

D-Link's direct attach cables deliver reliable and high-performance network solutions, designed specifically for D-Link series switches. Offering 10G, 25G, and 100G transmission speeds with 1 m, 3 m and 7 m length options, these cables are suitable for various application requirements, ensuring fast and stable connections between devices for seamless network operation.

Direct Attach Cables



DEM-CB100S



DEM-CB300S



DEM-CB700S



DEM-CB100S28



DEM-CB100Q28



DEM-CB100Q28-4S28

D-Link

Contact and support
Contact us: **dlink-mea.com/contact**
Technical support: **dlink-mea.com/support**
Where to buy: **dlink-mea.com/en/where-to-buy**

Images are for illustrative purposes only. The actual products can differ in appearance. Information is subject to change without notice. D-Link and the D-Link logo are trademarks or registered trademarks of D-Link. All other third-party marks mentioned herein may be trademarks of their respective owners.

Copyright ©2026 D-Link Corporation. All Rights Reserved.

Website
Business switches
and datasheets
dlink-mea.com/en/business/switching

Digital copy
This catalog as a PDF
on your phone
dlink-mea.com/switch-catalog