

Industrial Switch Product Catalog

One Connection · Infinite Possibilities



Table of Contents

About D-Link

04 About D-Link
06 Product Overview

Product Portfolio

10 Industrial Managed Switches
12 Industrial L2+ Managed Switches
14 Industrial Unmanaged Switches

Product Specifications

18 Industrial Managed Switches
19 Industrial L2+ Managed Switches
20 Industrial Unmanaged Switches
21 Industrial L2 Managed Switches

Accessories

21 Optional Accessories

About D-Link

D-Link, a global leader in the networking industry, began expanding worldwide under the D-Link brand in 1986 and was officially established as D-Link Corporation in Taiwan in 1987. With 90 operational and sales locations across 43 countries, D-Link provides innovative and reliable networking equipment, AI-powered cloud management services, and complete infrastructure solutions for individuals, homes, businesses, and industries. The company is committed to driving the global transformation toward smarter connectivity.

Built on the brand promise of MIT quality, creative innovation, solution-oriented, one-stop service, and user-centric design, D-Link delivers exceptional products and services that meet the evolving needs of users worldwide. Since joining the Taiwan Steel Group in 2020, the company has further solidified its position as a global leader in intelligent networking solutions. Through continuous innovation and a firm commitment to ESG, innovation, and global excellence, D-Link has earned widespread recognition in corporate governance, ESG performance, and international design awards.

Looking ahead, D-Link will further integrate global resources to strengthen operational synergy, reinforce its leadership in the smart networking industry, and realize its brand vision “One Connection • Infinite Possibilities.”

MIT QUALITY



Taiwanese engineering excellence—precision, reliability, and innovation at its core.

CREATIVE INNOVATION



Pioneering next generation networking through visionary R&D and user-centric design.

SOLUTION ORIENTED



Intelligent, adaptable solutions empowering homes, businesses, and industries.

ONE-STOP SERVICE

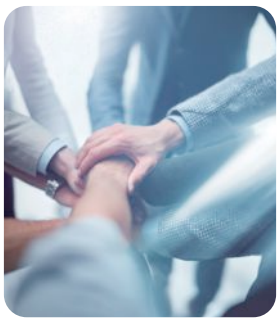

Comprehensive solutions with seamless support for an effortless experience.

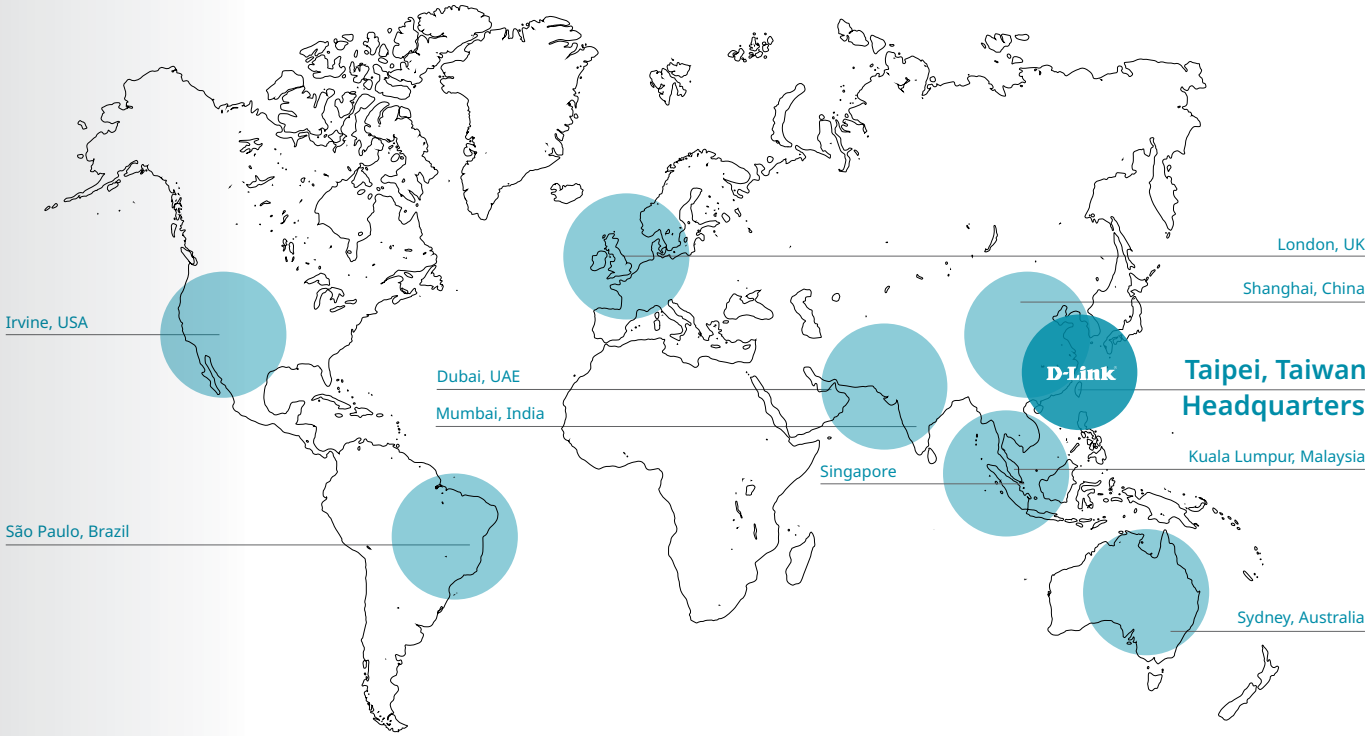

35+ Years of networking experience

90 Sales offices in 43 countries

35 RMA centers

1460+ Employees globally

Realize Resilience from Core to Rugged Edge

D-Link is known for its leading position in network solutions. Yet, as networks evolve, the last mile extends beyond the doorway into various rugged scenarios. The D-Link Industrial Switches are designed to cope with the challenges of vertical applications.

D-Link Industrial Switches are built with hardened components to resist thermal issues without an active cooling fan. This ensures a wide operating temperature range and guarantees an extended lifespan for your investment. Also, D-Link Industrial Switches generally have an IP40 casing, which offers better ingress protection than most of its peers. Furthermore, D-Link Industrial Managed Switches support the ERPS redundancy protocol to build resilient connections at the edge and aggregation layers to ensure all the connected devices can serve the network's purposes. These four fiber uplink models allow coupling ring topology and are particularly suitable for ITS and city-wide surveillance applications. The featured PoE models support 30 or 60W / port and a solid power budget for all PoE applications.

D-Link Industrial Switches are second to none in reliability and resilience. They can collaborate with D-Link M2M solutions, ensuring a seamless and robust network management experience.

- Industrial Managed Switches
- Industrial L2+ Managed Switches
- Industrial Unmanaged Switches

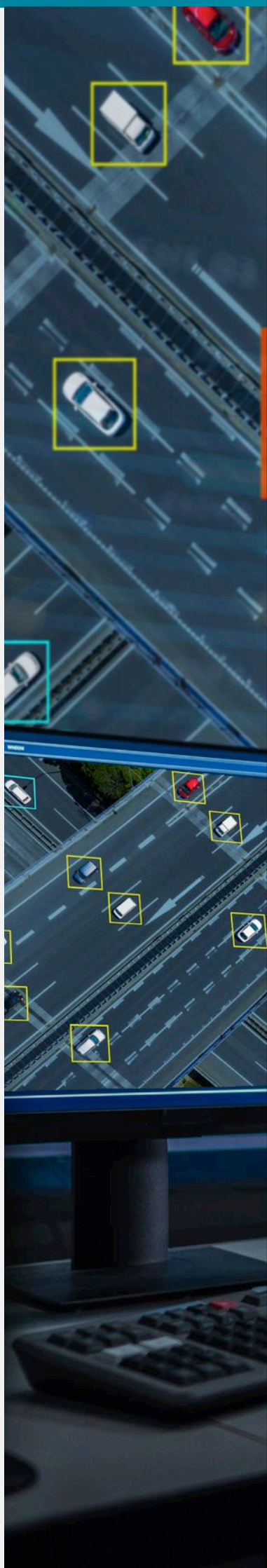



Product Portfolio

D-Link Industrial Switches serve a portfolio with a high capability/price ratio, aiming to meet the demand for the last-mile expansion of D-Link-based core and aggregation solutions. Each D-Link Industrial Switch series (DIS) delivers value for different applications' requirements. This allows users to choose the most suitable product, from small to large, for the exact scenario.

The three DIS series give customers easy and affordable access to industrial-grade Ethernet switches. At the same time, they serve infrastructural projects with L2+ Managed ERPS switches at the edge and managed switches to aggregate with advanced management, L3 routing, and carrier-grade connectivity fault management. The layered product portfolio ensures network efficiency and promises the cost-effectiveness of your investment.

Industrial Grade Design

Wide temperature for rugged, hardened design

Fanless Design

Fanless design for enhanced reliability and reduced noise

DIN-Rail Installation

Standardized rail system used for industrial equipment

Surge Protection

6kV surge for all Ethernet ports to enhance reliability

Power Over Ethernet (PoE)

Standard 802.3at/bt , power your devices (cameras, AP, etc.)

Fiber Interface

High speed throughput and long range data transmission

Redundant Ring Protection

ERPS ensures fast, reliable network recovery

10G Uplink Backbone

DIS-310G Series support large data throughput for big data

Industrial Managed Switches

DIS-310G / DIS-700G Series

- Managing traffic between access and core layers
- Using Redundant Ring Protection to aggregate multiple sites and boost the reliability of the entire network
- Support SNMP v1 / v2c / v3 and CLI



DIS-310G-24X

16 x GE
4 x 1G SFP
4 x 10G SFP+
DIN Rail Mount

- 4 x 10G SFP + 4 x 1G SFP readily for aggregated throughput and various redundant topologies
- L3 management extends routing to the field and minimizes the Layer 2 fault domain, thus limiting the number of DoS and DDoS attacks



DIS-700G-28XS

24 x 1G SFP
4 x 10G SFP+
Rack Mount

- 4 x 10G SFP + 24 x 1G SFP readily for aggregated throughput
- L2 management delivers QoS features and multi-layer ACLs, ensuring optimal bandwidth management and robust network security

Industrial L2+ Managed Switches

DIS-210G Series

- Support SNMP v1/v2c/v3 and CLI
- Using ERPS to link each point and establish the redundancy at the edge
- Power over Ethernet offers standard 802.3 at/bt powers the PDs up to 60W / port



DIS-210G-06

4 x GE
2 x 1G SFP
DIN Rail Mount



DIS-210G-12

8 x GE
4 x 1G SFP
DIN Rail Mount



PoE +

DIS-210G-06P

4 x GE PoE 30W
2 x 1G SFP
DIN Rail Mount



PoE +

DIS-210G-12P

8 x GE PoE 30W
4 x 1G SFP
DIN Rail Mount



PoE + PoE ++

DIS-210G-12UP

2 x GE PoE 60W
6 x GE PoE 30W
4 x 1G SFP
DIN Rail Mount

Industrial Unmanaged Switches

DIS-100 / DIS-110G Series

- Simple and cost-effective, easy to use, no IT staff needed
- Wide-temperature operation from -40°C to 75°C for harsh industrial environments
- Power over Ethernet offers standard 802.3af/at powers the PDs up to 30W / port



DIS-100E-05

5 x 10/100Mbps
DIN Rail Mount



New

DIS-110G-05

5 x GE
DIN Rail Mount



DIS-100G-06

4 x GE
2 x 1G SFP
DIN Rail Mount



DIS-100G-10

8 x GE
2 x 1G SFP
DIN Rail Mount



New

DIS-110G-10

8 x GE
2 x 1G SFP
DIN Rail Mount



PoE +

DIS-100G-06P

4 x GE PoE 30W
2 x 1G SFP
DIN Rail Mount



PoE + New

DIS-110G-06P

4 x GE PoE 30W
1 x GE
1 x 1G SFP
Din Rail Mount



PoE +

DIS-100G-10P

8 x GE PoE 30W
2 x 1G SFP
DIN Rail Mount



PoE + New

DIS-110G-10P

8 x GE PoE 30W
2 x 1G SFP
Din Rail Mount

Industrial Managed Switches
High-Performance and Reliable



Industrial-Grade Design

10G Uplink Backbone

Redundant Ring Protection

L3 Routing

Connectivity Fault Management

Advanced Security

Enhanced Reliability

Wide Temperature

The DIS-310G / DIS-700G Series aims to aggregate a middle site in the field. Aside from the hardware reinforcements found on the DIS-100 and 210G series, the managed series has 4-24 1G SFP and 4 10G SFP ports to qualify them for the purpose.

The DIS-310G-24X also supports ERPS (Ethernet Ring Protection Switching) for quick failover recovery in ring topologies. This feature is crucial in maintaining network resilience, as it ensures that the network can quickly recover without disrupting the connected devices in the event of a link failure. On top of the entire DIS-210G series software function set, DIS-310G-24X offers L3 Static Route, RIP/RIPng, and OSPFv2 / v3. These L3 features allow for managing cross-LANs / VLANs. Plus, this model supports IEEE 802.3ah, IEEE 802.1ag, and ITU-T Y.1731 to meet the OAM (Operations, Administration, and Maintenance) requirements for Carrier Ethernet. Alternatively, the DIS-700G-28XS is a hardened rackmount model that can aggregate up to 24 ports' fiber connections. It supports all required L2 management protocols, comprehensive security features, and optical transceiver Digital Diagnostics Monitoring (DDM). The DIS-310G / DIS-700G Series is the hinge that strengthens core-to-edge resilience.

Explore the Possibilities

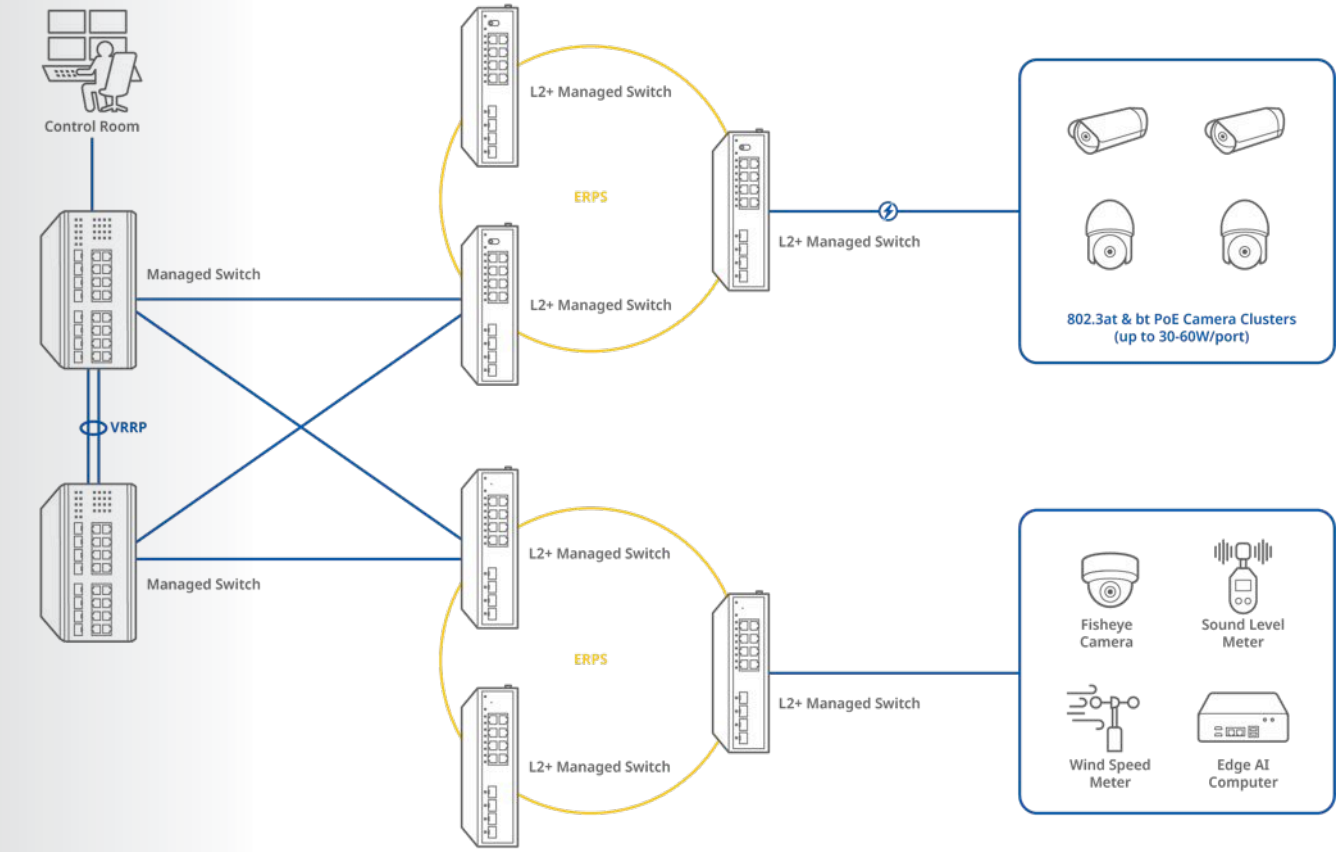

Fiber Copper PoE

Copper Switch

- High Capacity and Flexibility
- ERPS Redundant Protection
- Connectivity Fault Management

Series	Model	Description
DIS-310G	DIS-310G-24X	16 Ports 1G + 4 Ports 1G SFP + 4 Ports 10G SFP+ Industrial Managed Switch, DIN

Fiber Switch

- High Capacity and Flexibility
- Layer 2+ Management Features
- Boost Reliability and Simplify Maintenance

Series	Model	Description
DIS-700G	DIS-700G-28XS	24 Ports SFP + 4 Ports 10G SFP+ Industrial Managed Switch, Rack

Industrial L2+ Managed Switches
Smart and Reliable



Smart Management

Power Over Ethernet

ERPS Redundant Protection

Basic Network Security

The DIS-210G Series is available in PoE/Non-PoE and 6/12-port varieties. These switches feature all the hardware advantages of the DIS-100 Series, yet they integrate advanced management and security functions to provide a complete industrial networking solution.

The DIS-210G Series supports ERPS quick failover recovery for ring topologies that ensures minimal downtime and avoids any loss of data in mission-critical deployment settings. The 12-port models have 4 fiber uplinks that allow upgrading the Ring protection from between the nodes to between the Rings, which means boosted resilience for ITS and city surveillance applications.

The DIS-210G Series provides a variety of network management features, including L2 forwarding modes, VLAN, IGMP, QoS, and ACL configurations to optimize network efficiency and security.

Explore the Possibilities

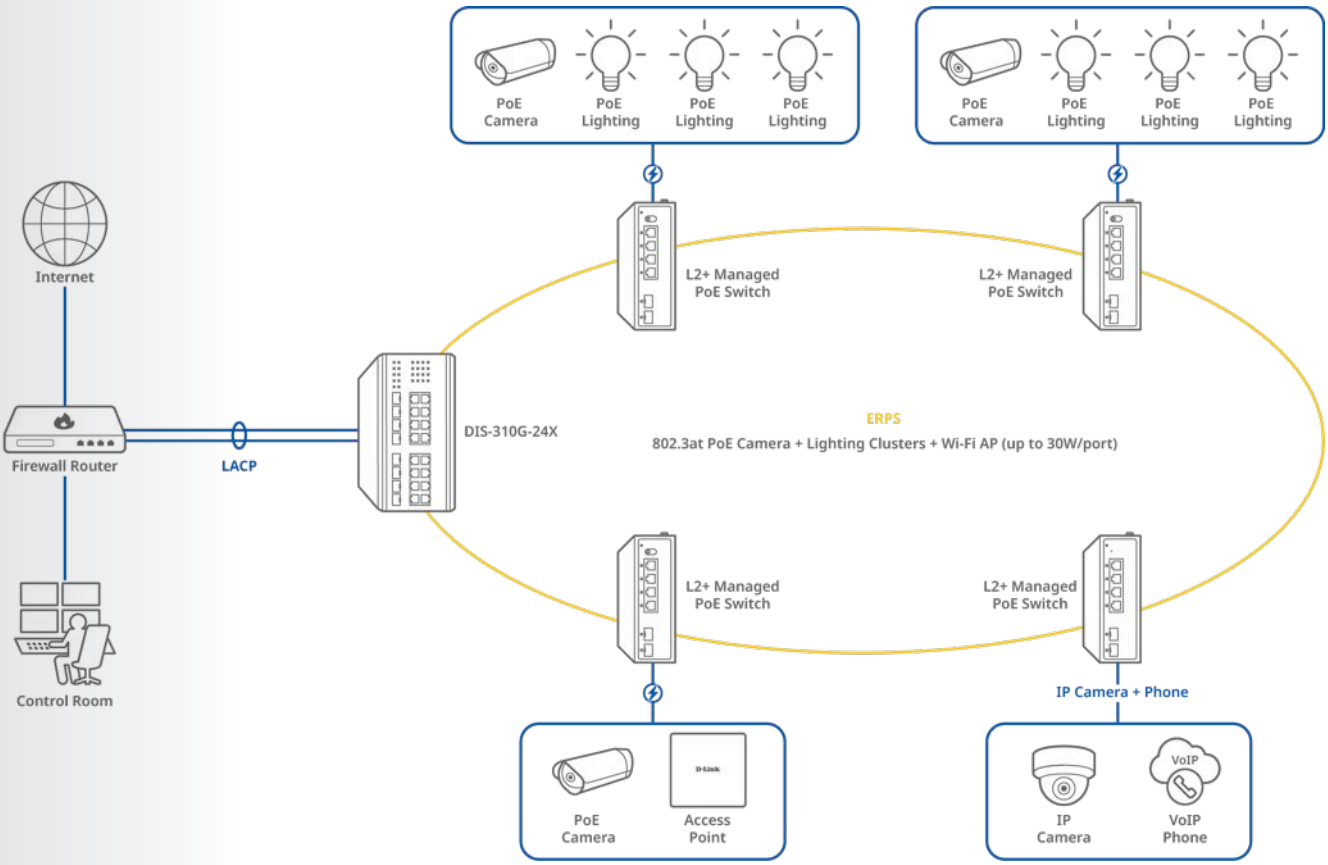

Fiber Copper PoE

Copper Switches

- ERPS Redundant Protection
- Smart Management
- Fiber Interface

Series	Model	Description
DIS-210G	DIS-210G-06	4 Ports 1G + 2 Ports 1G SFP Industrial L2+ Managed Switch, DIN
	DIS-210G-12	8 Ports 1G + 4 Ports 1G SFP Industrial L2+ Managed Switch, DIN

PoE Switches

- Power up to 60W / port
- ERPS Redundant Protection
- 6kV Surge Protection

Series	Model	Description
DIS-210G	DIS-210G-06P	4 Ports 1G PoE+ + 2 Ports 1G SFP Industrial L2+ Managed Switch, 120W, DIN
	DIS-210G-12P	8 Ports 1G PoE+ + 4 Ports 1G SFP Industrial L2+ Managed Switch, 240W, DIN
	DIS-210G-12UP	6 Ports 1G PoE+ + 2 Ports 1G PoE++ + 4 Ports 1G SFP Industrial L2+ Managed Switch, 240W, DIN

Industrial Unmanaged Switches
Slim and Reliable



Industrial-Grade Design

Power Over Ethernet

Wide Temperature

Plug and Play

The DIS-100 and DIS-110G Series offers Gigabit and Fast Ethernet options, with both PoE and non-PoE models available in 6- or 10-port designs. Both the DIS-100G-10P and DIS-110G series support data transmission up to 250 meters; the DIS-100G-10P also supports remote power supply up to 250 meters, further enhancing flexibility and making it an ideal choice for extended camera deployments. These switches are housed in a highly resistant IP30 / IP40-rated metal casing to protect the switches from harsh environmental conditions.

The high Electromagnetic Compatibility (EMC) protects the DIS-100 and DIS-110G Series from unwanted effects when operating in environments with substantial electromagnetic interference. Meanwhile, the fanless design extends the life of the DIS-100 and DIS-110G Series while also operating in a wide temperature range from -40 °C up to 75 °C.

The DIS-100 and DIS-110G Series can be mounted on a DIN rail. It supports dual power inputs for redundancy, ensuring continued operation if the primary supply fails. All Ethernet ports feature 6kV surge protection for enhanced reliability.

Explore the Possibilities

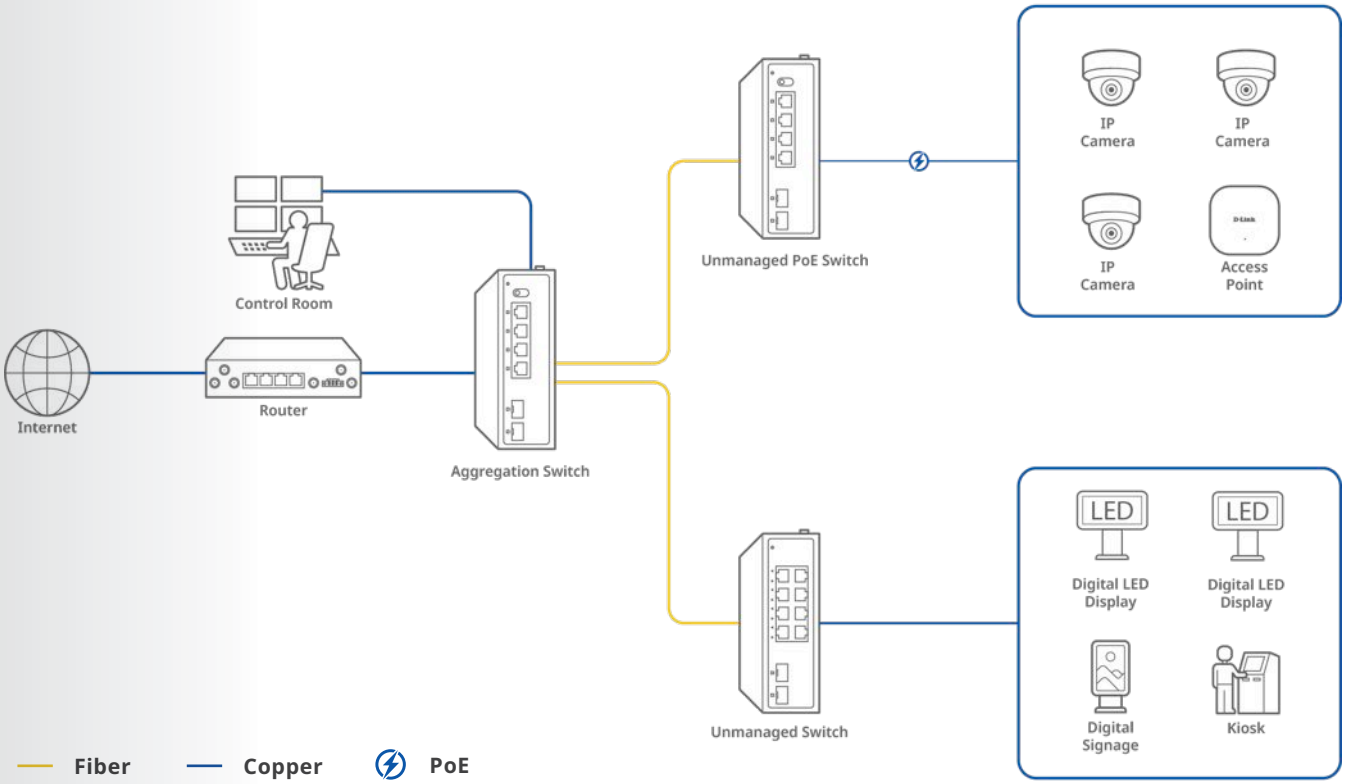

Copper Switch

- Industrial-Grade Durability
- Wide Temperature
- Simple and Cost-Effective

Series	Model	Description
DIS-100E	DIS-100E-05	5 Ports 10/100Mbps Industrial Unmanaged Switch, DIN
DIS-100G	DIS-100G-06	4 Ports 1G + 2 Ports 1G SFP Industrial Unmanaged Switch, DIN
	DIS-100G-10	8 Ports 1G + 2 Ports 1G SFP Industrial Unmanaged Switch, DIN
DIS-110G	DIS-110G-05	5 Ports 1G Industrial Unmanaged Switch, DIN
	DIS-110G-10	8 Ports 1G + 2 Ports 1G SFP Industrial Unmanaged Switch, DIN

PoE Switch

- Power up to 30W / port
- Fiber Interface
- 6kV Surge Protection

Series	Model	Description
DIS-100G	DIS-100G-06P	4 Ports 1G PoE+ + 2 Ports 1G SFP Industrial Unmanaged Switch, 120W, DIN
	DIS-100G-10P	8 Ports 1G PoE+ + 2 Ports 1G SFP Industrial Unmanaged Switch, 240W, DIN
DIS-110G	DIS-110G-06P	4 Ports 1G PoE+ + 1 Port 1G + 1 Port 1G SFP Industrial Unmanaged Switch, 120W, DIN
	DIS-110G-10P	8 Ports 1G PoE+ + 2 Ports 1G SFP Industrial Unmanaged Switch, 240W, DIN

Product Specifications




D-Link

Industrial Managed Switches

Model	DIS-310G-24X	DIS-700G-28XS
Product Image		
Hardware		
Number of Gigabit Ports	16	-
Number of SFP Ports	4	24
Number of 10G SFP Ports	4	4
Switching Capacity	120 Gbps	128 Gbps
Fanless	•	•
802.3az EEE	•	•
Power Supply Type	DC:48-60V Dual input	DC:20-57V Dual input
DIN Rail	•	–
Operating Temperature	-40 ˚C to 75 ˚C (-40 ˚F to 167 ˚F)	-40 ˚C to 75 ˚C (-40 ˚F to 167 ˚F)
Surge Protection	6kV	–
Dimension	100 x 140 x 170 mm	440 x 44 x 318.5 mm
Ingress Protection	IP40	IP30
Jumbo Frame	12K	9K
L2		
MAC Address	Up to 16K	Up to 8K
802.1D STP, 802.1w RSTP, 802.1s MSTP	•	•
Ethernet Ring Protection Switching (ERPS)	•	–
802.3ad, 802.1AX Link Aggregation	•	–
VLAN		
VLAN Group	4K	1024
Port / VLAN Basis GVRP	•	•
Asymmetric, Private VLAN	•	–
Voice VLAN	•	–
L3		
IPv4 / IPv6 Routing Table	512 / 170	–
IPv4 / IPv6 Forwarding Table	2042 / 1700	–
IP Interfaces	64	–
IPv6 Neighbor Discovery(ND)	•	–
Static Route for IPv4 / IPv6	512 / 170	–
VRRP	•	–
RIP v1 / v2, RIPng, OSPFv2 / v3	•	–
Qos		
Number of Queues per Port	8	8
Class of Service (CoS)	•	•
Bandwidth Control	64 Kbps	1 Kbps
ACL		
ACL Ingress	•	•
Security		
SSH, SSL, IP-MAC-Port Binding (IMPB), ARP Spoofing Prevention, BPDU Attack Protection	•	SSH, SSL, IP-MAC-port binding (IMPB)
AAA		
802.1X, RADIUS	•	•
Management		
SNMP (v1 / v2c / v3), RMON v1 / v2	•	SNMP (v1 / v2c / v3), RMON v1
LLDP, LLDP-MED	•	–
ICMPv6	•	–
OAM by 802.3ah, 802.1ag, ITU-T Y.1731	•	–
Command Line Interface (CLI)	•	•
Console Port	RJ45	RJ45

Industrial L2+ Managed Switches

Model	DIS-210G-06	DIS-210G-06P	DIS-210G-12	DIS-210G-12P	DIS-210G-12UP
Product Image					
Hardware					
Number of Gigabit Ports	4	4	8	8	8
Number of SFP Ports	2	2	4	4	4
Switching Capacity	12 Gbps	12 Gbps	24 Gbps	24 Gbps	24 Gbps
PoE Standards	–	802.3af, 802.3at	–	802.3af, 802.3at	802.3af, 802.3at, 802.3bt
PoE Power Budget	–	120W	–	240W	240W
PoE Capable Port	–	Port 1-4, up to 30W	–	Port 1-8, up to 30W	Port 3-8, up to 30W Port 1-2, up to 60W
Fanless	•	•	•	•	•
802.3az EEE	–	•	•	•	•
Power Supply Type	DC:12-55V Dual input	DC:48-55V Dual input	DC:12-55V Dual input	DC:48-55V Dual input	DC:48-55V Dual input
DIN Rail	•	•	•	•	•
Operating Temperature	-40 ˚C to 75 ˚C (-40 ˚F to 167 ˚F)	-40 ˚C to 75 ˚C (-40 ˚F to 167 ˚F)	-40 ˚C to 75 ˚C (-40 ˚F to 167 ˚F)	-40 ˚C to 75 ˚C (-40 ˚F to 167 ˚F)	-40 ˚C to 75 ˚C (-40 ˚F to 167 ˚F)
Surge Protection	6kV	6kV	6kV	6kV	6kV
Dimension	138 x 108 x 44 mm	138 x 108 x 44 mm	164 x 107 x 44 mm	164 x 107 x 44 mm	164 x 107 x 44 mm
Ingress Protection	IP40	IP40	IP40	IP40	IP40
Jumbo Frame	9K	9K	9K	9K	9K
L2					
MAC Address	Up to 8K	Up to 8K	Up to 8K	Up to 8K	Up to 8K
802.1D STP, 802.1w RSTP, 802.1s MSTP	•	•	•	•	•
Ethernet Ring Protection Switching (ERPS)	•	•	•	•	•
802.3ad, 802.1AX Link Aggregation	802.3ad	802.3ad	802.3ad	802.3ad	802.3ad
VLAN					
VLAN Group	4K	4K	4K	4K	4K
Port/VLAN Basis GVRP	•	•	•	•	•
Voice VLAN	•	•	•	•	•
L3					
IP Interfaces	10	10	10	10	10
IPv6 Support	•	•	•	•	•
Static Route for IPv4/IPv6	128 / 64	128 / 64	128 / 64	128 / 64	128 / 64
Qos					
Number of Queues per Port	8	8	8	8	8
Bandwidth Control	64 Kbps	64 Kbps	64 Kbps	64 Kbps	64 Kbps
ACL					
ACL Ingress	•	•	•	•	•
Security					
SSL, IP-MAC-Port Binding (IMPB), ARP Spoofing Prevention, BPDU Attack Protection	•	•	•	•	•
AAA					
802.1X, RADIUS	•	•	•	•	•
Management					
SNMP (v1/v2c/v3), RMON v1/v2	•	•	•	•	•
LLDP, LLDP-MED	•	•	•	•	•
ICMPv6	•	•	•	•	•
OAM by 802.3ah, 802.1ag, ITU-T Y.1731	•	•	•	•	•
Command Line Interface (CLI)	•	•	•	•	•
Console Port	RJ45	RJ45	RJ45	RJ45	RJ45

Industrial Unmanaged Switches

Model	DIS-100E-05	DIS-100G-06	DIS-100G-06P	DIS-100G-10	DIS-100G-10P
Product Image					
Hardware					
Number of 10/100 Mbps Ports	5	–	–	–	–
Number of Gigabit Ports	-	4	4	8	8
Number of SFP Ports	-	2	2	2	2
Switching Capacity	1 Gbps	12 Gbps	12 Gbps	20 Gbps	20 Gbps
PoE Standards	–	–	802.3af, 802.3at	–	802.3af, 802.3at
PoE Power Budget	–	–	120W	–	240W
PoE Capable Port	–	–	Port 1-4, up to 30W	–	Port 1-8, up to 30W
Fanless	•	•	•	•	•
802.3az EEE	•	•	•	•	•
Power Supply Type	DC:12-55V Dual input	DC:12-55V Dual input	DC:48-55V Dual input	DC:12-55V Dual input	DC:48-57V Dual input
DIN Rail	•	•	•	•	•
Operating Temperature	-40 ˚C to 75 ˚C	-40 ˚C to 75 ˚C	-40 ˚C to 75 ˚C	-40 ˚C to 75 ˚C	-40 ˚C to 75 ˚C
Surge Protection	6kV	6kV	6kV	6kV	6kV
Dimension	100 x 76.5 x 30 mm	138 x 108 x 44 mm	138 x 108 x 44 mm	138 x 108 x 44 mm	130.6 x 99 x 40 mm
Ingress Protection	IP40	IP40	IP40	IP40	IP30
Jumbo Frame	1.5K	9K	9K	9K	9K
Extend Mode (Up to 250M)	–	–	–	–	Data + PoE
L2					
MAC Address	Up to 1K	Up to 8K	Up to 8K	Up to 8K	Up to 4K

Model	DIS-110G-05	DIS-110G-06P	DIS-110G-10	DIS-110G-10P	DGS-F1008P-2S
Product Image					
Hardware					
Number of Gigabit ports	5	5	8	8	8
Number of SFP ports	-	1	2	2	2
Switching Capacity	10 Gbps	12 Gbps	20 Gbps	20 Gbps	20 Gbps
PoE standards	-	802.3af, 802.3at	-	802.3af, 802.3at	802.3af, 802.3at
PoE power budget	-	120W	-	240W	-
PoE capable port	-	Port 1-4, up to 30 W	-	Port 1-8, up to 30 W	Port 1-8, up to 30 W
Number of PoE Ports	0	4	0	8	8
Fanless	•	•	•	•	-
802.3az EEE	•	•	•	•	-
Power supply type	DC:12~55V Dual input	DC:48~55V Dual input	DC:12~55V Dual input	DC:48~57V Dual input	DC:48~56V Dual input
DIN Rail	•	•	•	•	•
Operating temperature	-40° to 75°C	-40° to 75°C	-40° to 75°C	-40° to 75°C	-40° to 75°C
Surge protection	6KV	6KV	6KV	6KV	4KV
Dimension	100 x 76.5 x 30 mm	120 x 87 x 30 mm	138 x 108 x 51 mm	138 x 108 x 51 mm	150 x 127 x 40 mm
Ingress protection	IP40	IP40	IP40	IP40	IP40
Jumbo frame	15K	9K	12K	12K	-
Extend Mode (Up to 250M)	Data only	Data only	Data only	Data only	-
L2					
MAC address	Up to 2K	Up to 2K	Up to 8K	Up to 8K	Up to 8K

Industrial L2 Managed Switches

Model	DGS-F3004P-2S	DGS-F3008P-2S	DGS-F3016P-4S
Product Image			
Hardware			
Number of Gigabit Ports	4	8	16
Number of SFP Ports	2	2	4
Switching Capacity	12 Gbps	20 Gbps	40 Gbps
PoE Power Budget	60W	120W	-
PoE Capable Port (802.3af/at)	Port 1-4, up to 30W	Port 1-8, up to 30W	Port 1-16, up to 30W
Long Range PoE (Up to 250M)	•	•	•
Fanless, 802.3az EEE	•	•	•
Power Supply Type	DC:48-56V Dual input	DC:48-56V Dual input	DC:48-56V Dual input
DIN Rail / Wall Mount	•	•	•
Operating Temperature	-40 °C to 75 °C	-40 °C to 75 °C	-40 °C to 75 °C
Surge Protection	6kV	6kV	-
Dimension	163 x 46.5 x 110 mm	163 x 46.5 x 110 mm	164 x 130 x 78.8 mm
Ingress Protection	IP40	IP40	IP40
L2			
MAC Address	Up to 16K	Up to 16K	Up to 16K
802.1D STP, 802.1w RSTP, 802.1s MSTP	•	•	•
Ethernet Ring Protection Switching (ERPS)	•	•	•
Link Aggregation (LACP)	•	•	•
IGMP / MLD Snooping, Port Mirroring	•	•	•
VLAN			
802.1Q VLAN (Port-based / MAC-based)	512	512	512
GVRP	•	•	•
QoS			
Number of Queues per Port	4	4	4
802.1p CoS, Bandwidth / Storm Control	•	•	•
Security			
L2 / L3 ACL, 802.1X	•	•	•
Management			
Web UI, CLI, Cable Diagnostics	•	•	•
SNMP (v1/v2/v3), RMON, LLDP	•	•	•
Console Port	RJ45	RJ45	RJ45

Optional SFP Transceivers

Category	Model	Description
Multi-Mode	DIS-S301SX	1000BASE-SX, multi-mode, 550 m, -40 ˚C to 85 ˚C operating temperature
	DIS-S302SX	1000BASE-SX, multi-mode, 2 km, -40 ˚C to 85 ˚C operating temperature
Single-Mode	DIS-S310LX	1000BASE-LX, single-mode, 10 km, -40 ˚C to 85 ˚C operating temperature
	DIS-S330EX	1000BASE-EX, single-mode, 30 km, -40 ˚C to 85 ˚C operating temperature
	DIS-S350LHX	1000BASE-LHX, single-mode, 50 km, -40 ˚C to 85 ˚C operating temperature
	DIS-S380ZX	1000BASE-ZX, single-mode, 80 km, -40 ˚C to 85 ˚C operating temperature

Optional Industrial Accessory

Category	Model	Description
Media Converter	DIS-M100G-SW	10/100/1000Base-T to SFP, -40 ˚C to 75 ˚C operating temperature

D-Link

Contact and support
Contact us: **dlink-mea.com/contact**
Technical support: **dlink-mea.com/support**
Where to buy: **dlink-mea.com/en/where-to-buy**

Images are for illustrative purposes only. The actual products can differ in appearance. Information is subject to change without notice. D-Link and the D-Link logo are trademarks or registered trademarks of D-Link. All other third-party marks mentioned herein may be trademarks of their respective owners.

Copyright ©2026 D-Link Corporation. All Rights Reserved.

Website
Industrial switches
and datasheets
dlink-mea.com/en/business/switching/industrial-switches

Digital copy
This catalog as a PDF
on your phone
dlink-mea.com/industrial-catalog