D-Link®

Wireless
Cloud Management

with Nuclias



nuclias unity

nuclias hyper

nuclias connect

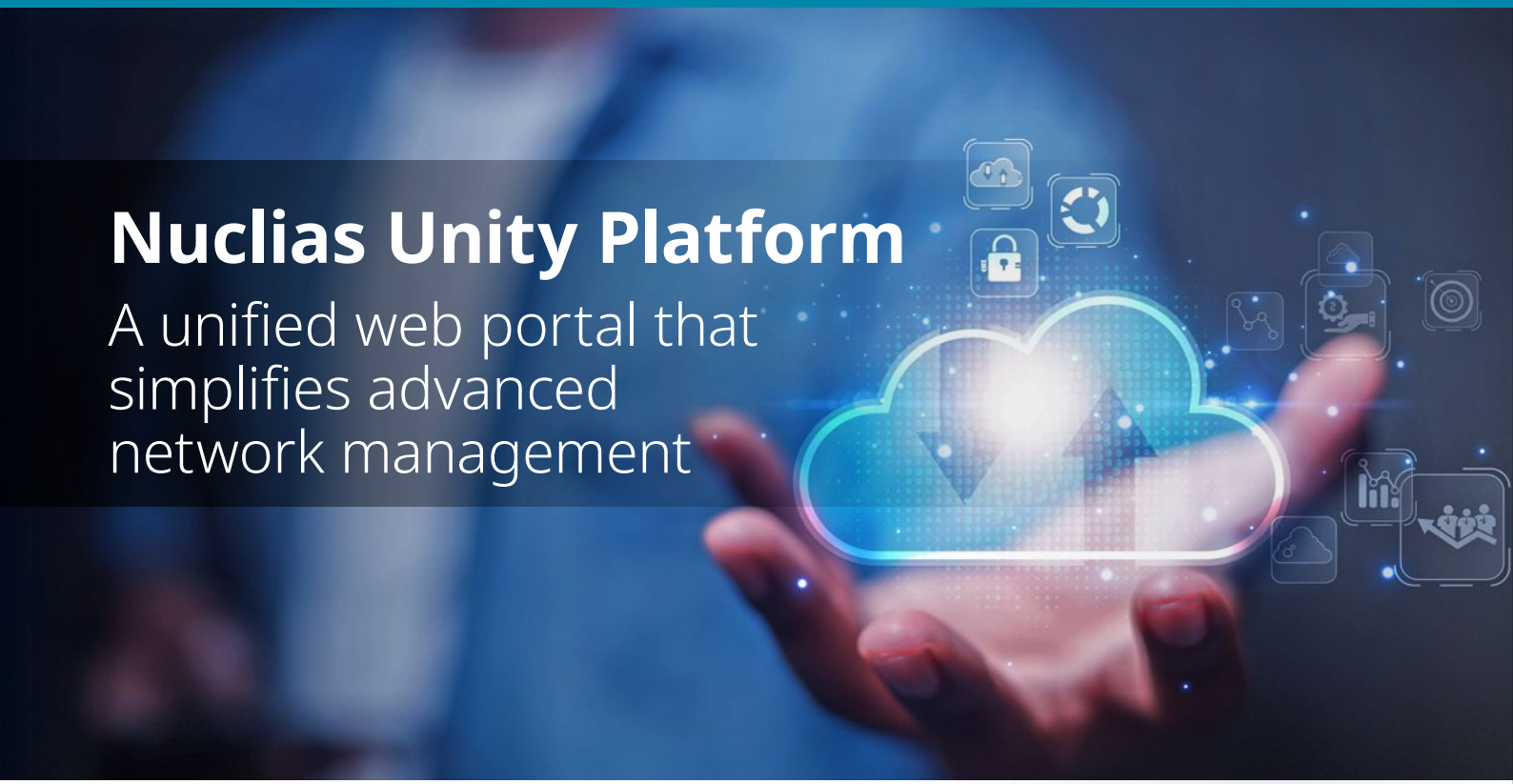

Nuclias Unity Platform

A unified web portal that simplifies advanced network management

Nuclias Unity is a cloud-based network management platform that simplifies modern network operations with centralized control and real-time monitoring across D-Link switches and access points. It supports multi-site management with an intuitive interface for dashboard viewing, configuration, reporting, and alerts. By unifying AP and switch management, it helps IT teams improve efficiency, reduce operational overhead, and scale networks more easily.

Support Products

Unified management of all business APs and switches, with features and supported models introduced in phases



Cloud Management

- Dashboard
- Account Management
- Organization Management
- Monitoring
- Configuration
- Reports
- Alerts



User Benefits

Hardware-Free Network Operations

Simplified network control. Get enterprise-grade reliability and stability without the cost and complexity of on-premises hardware. Simple, secure, and designed for effortless operations.

Role-Based Access Control

Assign precise permissions and capture every change in detailed audit logs. Achieve clear accountability, simplify reporting, and enforce scalable security—automatically.

One-Click Network Deployment

Configure once and deploy everywhere. Automate consistent network policies across all sites in seconds, eliminating manual configuration errors at any operational scale.

Manage Multiple Sites in One Place

View and control all your customers, branches, and locations in a single dashboard, while keeping each organization cleanly separated. Clarity at scale, perfect for service providers and multi-site businesses.

Explore the Possibilities

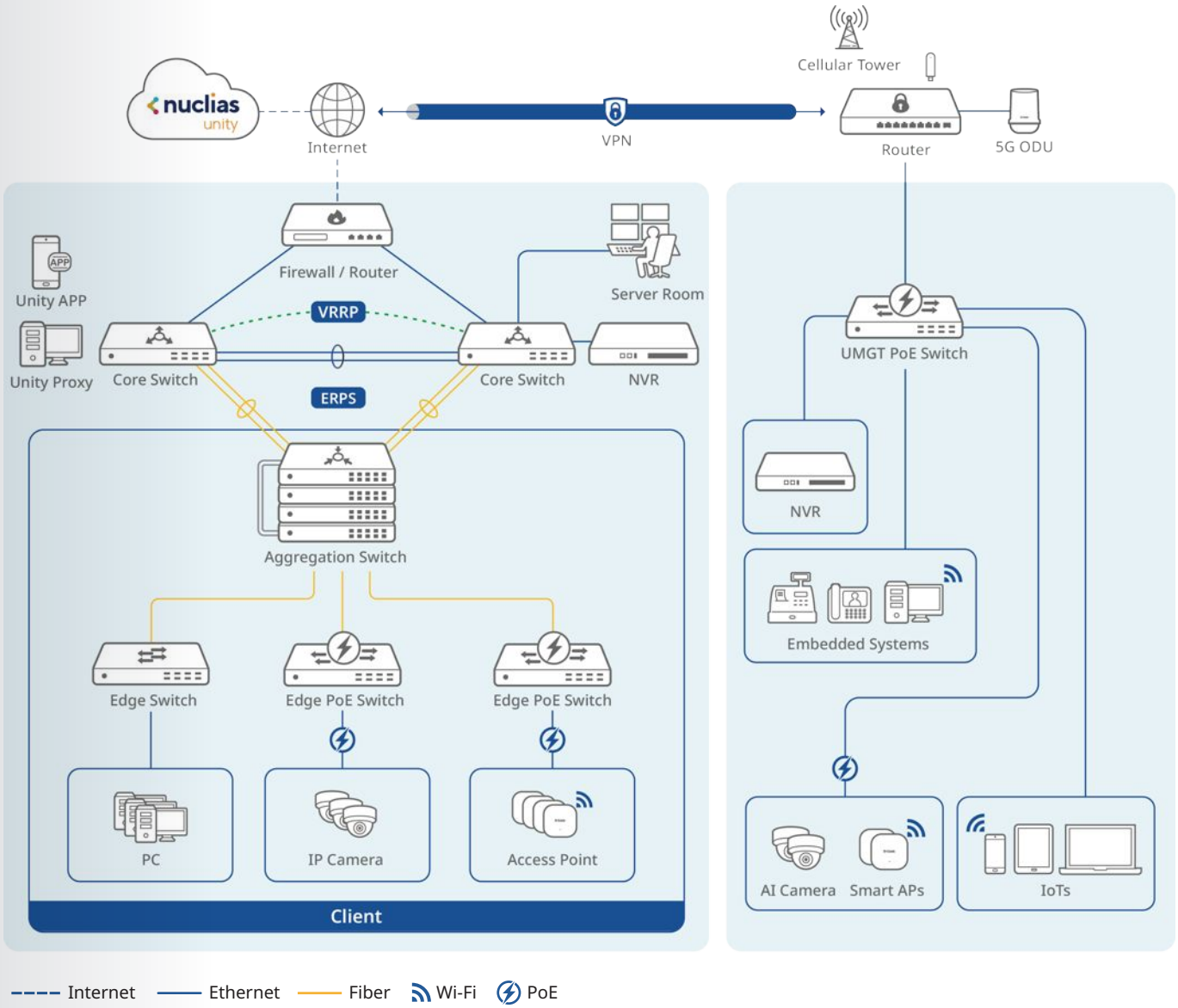



Cloud-Managed Wi-Fi with Nuclias Unity

Zero-Touch Deployment

Centralized Multi-SSID Management

Role-Based Administration

Real-Time Monitoring and Alerts

Wireless Insights and Analytics

Wi-Fi Planner Pro Heatmaps

WPA3 and Captive Portal Authentication

Central Firmware Upgrade

Nuclias Unity is D-Link's cloud network management platform for single-site and multi-site organizations. It brings D-Link Wi-Fi 7 and Wi-Fi 6 access points into one cloud dashboard, so IT teams can deploy, configure, monitor and troubleshoot wireless networks without on-premises controller hardware. Zero-touch provisioning gets new APs online quickly, central SSID and security settings keep every site consistent, and real-time dashboards, alerts and Health AI Insight help teams find and fix Wi-Fi issues before users notice.

Wireless highlights

- Up to 8 SSIDs per band on 2.4, 5 and 6 GHz, with VLAN per SSID
- Wi-Fi 7 Multi-Link Operation (MLO) support on Wi-Fi 7 APs
- Open, Enhanced Open, WPA2/WPA3 Personal and Enterprise security
- Click-through captive portal for guest access
- Channel utilization, clients by band, RSSI and client activity widgets
- Health AI Insight for early issue detection and root-cause analysis

One hierarchy for every network

Organization — a customer, company or business unit

> Site — a branch, hotel, campus or floor with its own SSIDs
>
> > Access points — adopted from inventory and configured by site

Role-based access can be scoped by organization or site, which suits MSPs and multi-branch businesses.

Getting access points online

Zero-Touch Provisioning

Add the AP to the organization inventory and assign it to a site. Once it gets an IP address by DHCP and reaches the internet, it pulls its configuration automatically.

Nuclias Unity App

The iOS and Android app discovers APs on the local network and batch-adopts several devices into a chosen organization and site in one go.

Nuclias Unity Proxy

A Windows software agent that securely bridges the cloud and devices on networks where direct cloud onboarding isn't possible.

Supported access points

Model	Generation	Class	Type
DAP-E9560	Wi-Fi 7	BE9500 tri-band (2.4/5/6 GHz)	Indoor ceiling mount, 10G PoE + 2.5G uplink
DAP-E3620	Wi-Fi 7	BE3600 dual-band	Indoor ceiling mount
DAP-E3620W	Wi-Fi 7	BE3600 dual-band	Indoor wall plate
DAP-E3620OU	Wi-Fi 7	BE3600 dual-band	Outdoor
DAP-X3060	Wi-Fi 6	AX3000 dual-band	Indoor ceiling mount
DAP-X3060W	Wi-Fi 6	AX3000 dual-band	Indoor wall plate
DAP-X3060OU	Wi-Fi 6	AX3000 dual-band	Outdoor
DAP-X2810	Wi-Fi 6	AX1800 dual-band	Indoor ceiling mount

Why cloud management for Wi-Fi

Challenge	How Nuclias Unity helps
Rolling out Wi-Fi at many branches	Zero-touch provisioning and per-site settings give every branch the same SSIDs and security
No IT staff on site	Remote monitoring, email alerts, event logs and remote firmware upgrades
Slow or patchy Wi-Fi complaints	Channel utilization, RSSI and clients-by-band views, plus Health AI Insight
Planning a new floor or building	Wi-Fi Planner Pro heatmaps and AP placement recommendations before installation
Guests and staff on one network	Separate SSIDs with VLANs, a click-through captive portal and Enterprise authentication for staff
Managing many customers (MSP)	Multi-organization dashboard with role-based access scoped per organization or site

Ideal for

Hospitality | Retail chains | Education | F&B | Multi-dwelling units | SMB & enterprise offices | Manufacturing | Government | Managed service providers

On-premises

Nuclias Network Controllers

Centralized, Intuitive Interface for Deployment and Configuration



Centralized Device Management

Role-Based Administration

Real-Time Monitoring and Alerts

Traffic Reporting and Analytics

VLAN
Compliant with IEEE 802.1Q VLAN

Auto RF Management and Bandwidth Optimization

Multi-SSID and Captive Portal Authentication

Central Firmware Upgrade

Streamline network management with a centralized, intuitive interface for effortless deployment and configuration. Nuclias solutions scale seamlessly from medium to large deployments, ensuring flexibility and growth. Advanced security features, including VLANs, access control, and role-based administration, provide robust protection and reliable operations. Built-in Auto RF Management and bandwidth optimization maintain consistent Wi-Fi performance. Real-time monitoring and detailed traffic analytics offer valuable insights for proactive network management and informed decision-making.

Medium to Large Network

Nuclias Connect

- Designed for medium to large networks, the DNH-1000 features built-in Nuclias Connect software and enables management of up to 500 devices (APs / switches)

nuclias connect



DNH-1000

- 1 x 2.5GE LAN
- 1 x USB 3.0
- Up to 500 devices
- Nuclias Connect built-in
- Manage all APs and Aggregation / Edge Switches
- Hardware Controller

Medium to Large Network

Nuclias Connect

- With the Nuclias Connect management platform, the DNH-3000 enables centralized management and monitoring of up to 1,500 devices, streamlining network management tasks and enhancing IT efficiency

nuclias connect



DNH-3000

- 2 x 10G SFP + 4 x 1G
- 1 x USB 3.2
- Up to 1500 devices
- Nuclias Connect built-in
- Manage all APs and Aggregation / Edge Switches
- Hardware Controller

Large Network

Nuclias Hyper

- Tailored for multi-site network infrastructures, the Nuclias software controller is designed to manage up to 2,000 switches and wireless APs without geographic limitations

nuclias hyper



DNC-5000

- Linux / Windows Support
- Up to 2000 devices
- Manage all EAPs and core / aggregation/edge switches
- Software Controller

Nuclias Network Controllers

The Nuclias Network Controller is D-Link's advanced network management solution, evolving from a basic management tool into a robust and scalable networking platform tailored for diverse environments. Designed to adapt to diverse customer requirements, the platform offers flexible deployment options, including Nuclias hardware controllers—ranging from the DNH-1000 for medium to large networks to the DNH-3000 for medium- to large-scale environments—and the Nuclias Hyper software controller (DNC-5000) for large-scale infrastructures.

Embodying D-Link's commitment to innovation and user-focused design, the Nuclias Network Controller is an entirely on-premises solution. Unlike cloud-reliant systems, it ensures exceptional data privacy, minimizes dependence on internet connectivity, and provides complete control over network operations.

Single Site

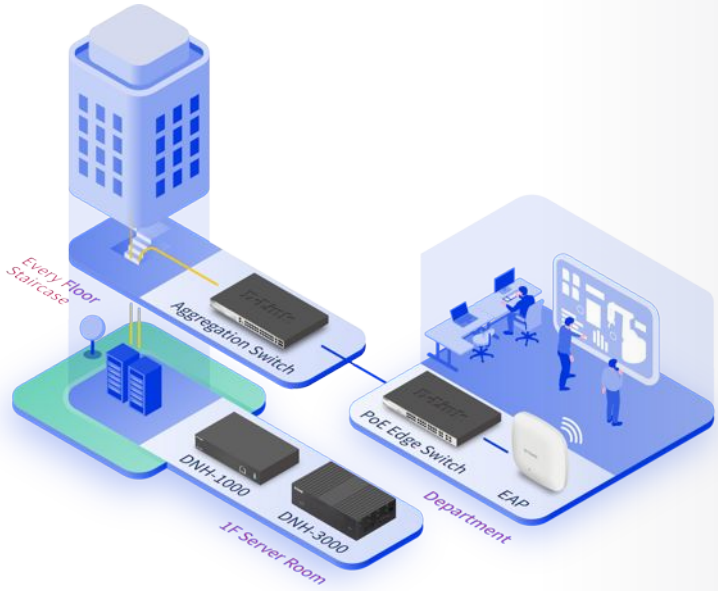

Multi-Site

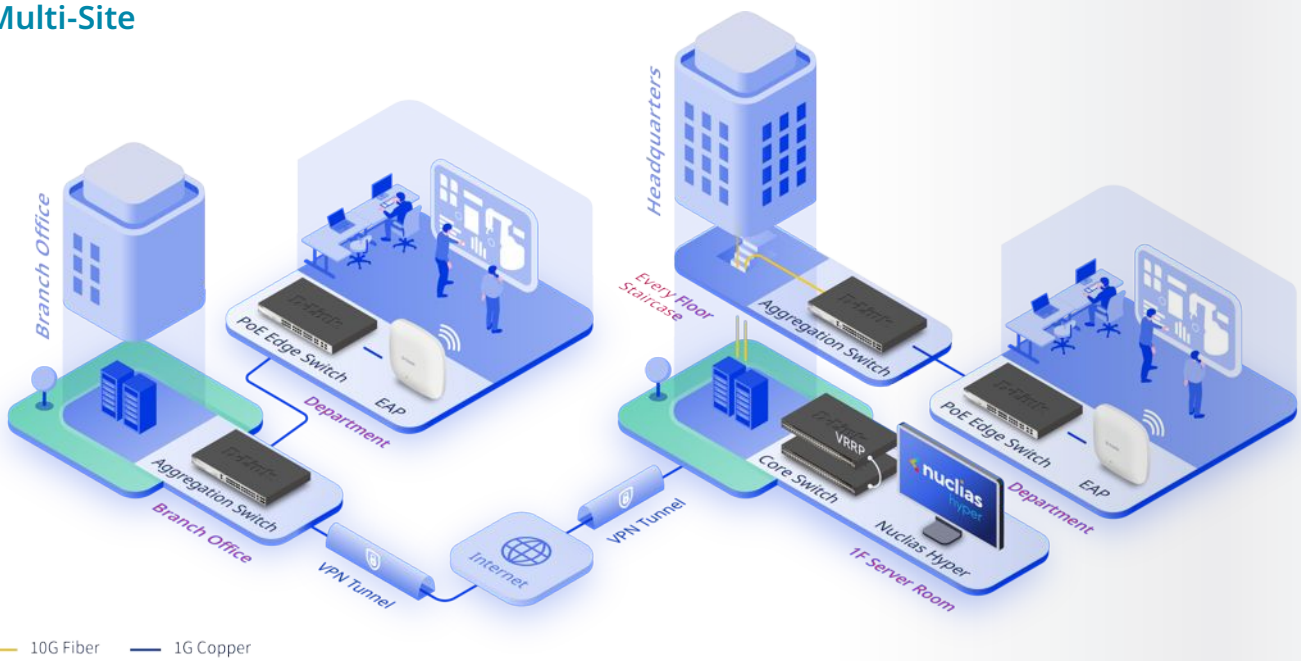

10G Fiber — 1G Copper

Explore the Possibilities

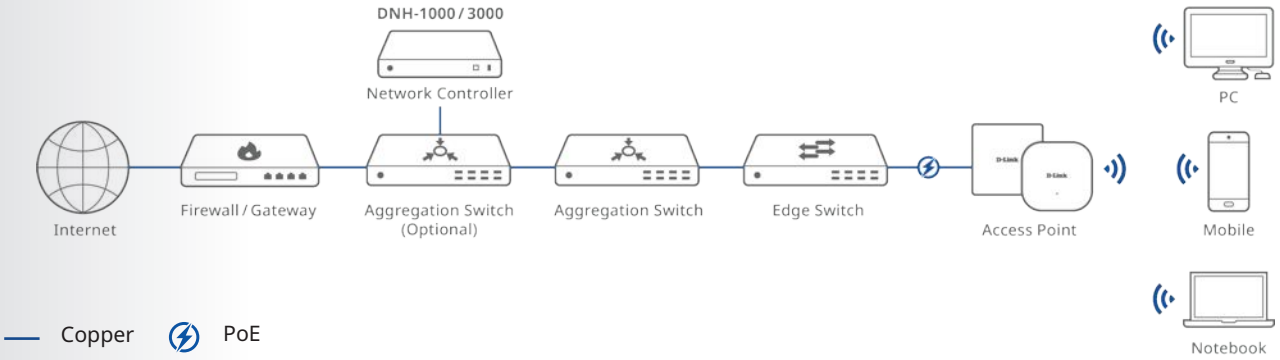

DNH-1000 / DNH-3000

- Built-in Nuclias Connect
- Manage all APs and aggregation / edge switches
- Device management capacity: up to 500 devices (DNH-1000) and up to 1,500 devices (DNH-3000)
- Interface: 1 x 2.5G Ethernet Port + 1 x USB 3.0 Port (DNH-1000) and 2 x 10G SFP Ports + 4 x 1G Ethernet Ports + 1 x USB 3.2 Port (DNH-3000)

Supported Devices			
Switches	**Aggregation**	**Edge**	
	• DXS-3130 Series • DMS-3130 Series	• DGS-1100 Series • DGS-1210 Series • DMS-1250 Series • DXS-1210 Series • DXS-1250 Series	
Enterprise APs	**Wi-Fi 7**	**Wi-Fi 6**	**Wi-Fi 5**
	• DAP-E9560	• DAP-X3060OU • DAP-X3060 • DAP-X2850 • DAP-X2810 • DAP-X3060W	• DAP-3666 • DAP-2622

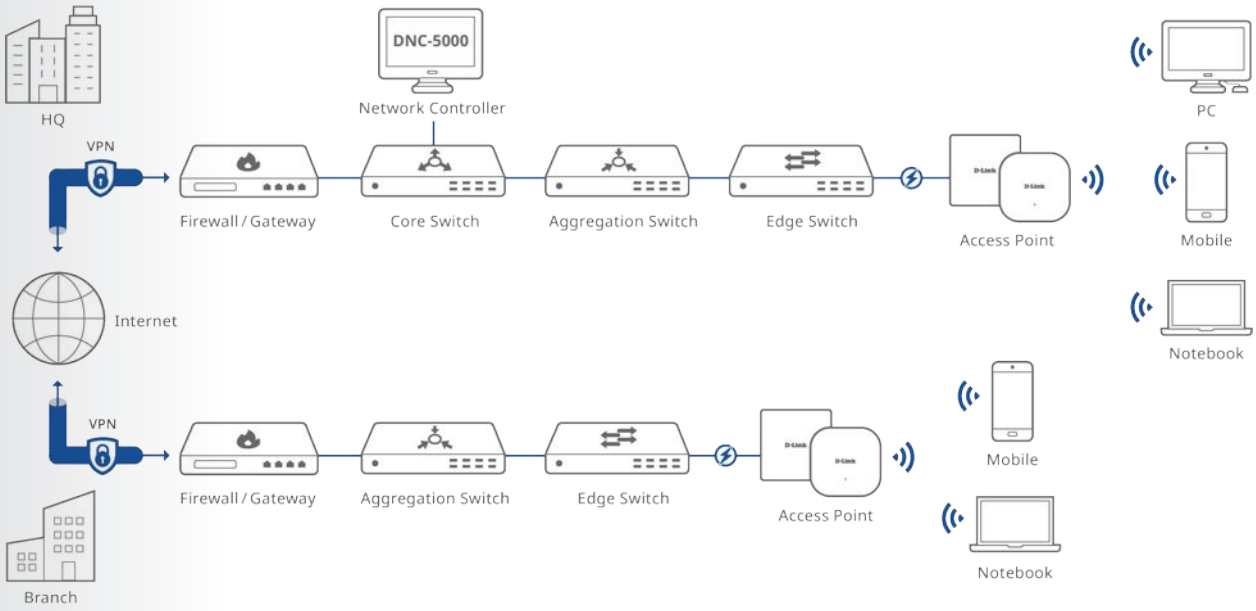

DNC-5000

- Built-in Nuclias Hyper
- Manage all EAPs and core / aggregation / edge switches
- Device management capacity: up to 2,000 devices
- Linux / Windows Support

Supported Devices			
Switches	**Core**	**Aggregation**	**Edge**
	• DGS-3630 Series • DXS-3410 Series • DXS-3610 Series	• DGS-3130 Series • DMS-3130 Series • DXS-3130 Series	• DGS-1100 Series • DGS-1210 Series • DGS-1250 Series • DGS-1510 Series • DGS-1520 Series • DGS-1530 Series • DMS-1250 Series • DXS-1210 Series • DXS-1250 Series
Enterprise APs	**Wi-Fi 7**	**Wi-Fi 6**	**Wi-Fi 5**
	• DAP-E9560	• DAP-X3060OU • DAP-X3060W • DAP-X3060 • DAP-X2850 • DAP-X2810	• DAP-3666 • DAP-2622

Network Controllers

Model	DNH-1000	DNH-3000	DNC-5000
Product Image			
Hardware			
Device Interfaces	2.5G Ethernet Port x 1 USB 3.0 x 1	10G SFP Slot x 2 1G Ethernet Port x 4 USB 3.2 x 1	-
LEDs	Power / Status / LAN	Power / Status / LAN	-
Dimension	190 x 120 x 38 mm	159.8 x 105.84 x 41.75 mm	-
Weight	640 g	483 g	-
Power Source	12V / 2A	12V / 2A	-
Operating Temperature	0˚C to 40˚C (32˚F to 104˚F)	0˚C to 40˚C (32˚F to 104˚F)	-
Storage Temperature	-20˚C to 70˚C (-4˚F to 158˚F)	-20˚C to 70˚C (-4˚F to 158˚F)	-
Operating Humidity	10% to 90% non-condensing	10% to 90% non-condensing	-
Storage Humidity	5% to 95% non-condensing	5% to 95% non-condensing	-
Software			
Management System	Nuclias Connect	Nuclias Connect	Nuclias Hyper
Device Management			
Management Scale	500 devices	1500 devices	2000 devices
Network Type	Medium / Large Network	Medium / Large Network	Large Network
Managed Device	All EAPs Aggregation Switch Edge Switches	All EAPs Aggregation Switch Edge Switches	All EAPs Core Switch Aggregation Switch Edge Switches
System Management			
Setup Wizard	✓	✓	✓
Role Based Administration	✓	✓	✓
Multi-Site Management	✓	✓	✓
Device Layer 2 / 3 Discovery	Layer 2 / Layer 3	Layer 2 / Layer 3	Layer 2 / Layer 3
Custom / Topology / Device View	✓	✓	✓
Event Alarm and Notification	✓	✓	✓
Network Summary Report	✓	✓	✓
Batch Configuration	✓	✓	✓
Batch Firmware Upgrading	✓	✓	✓
Online Firmware Upgrade	✓	✓	✓
Single Sign-On	✓	✓	✓
REST API Support	✓	✓	✓
Multilingual	✓	✓	✓
Wired Function			
VLAN Group	✓	✓	✓
MAC ACL Group	✓	✓	✓
PoE Schedule	✓	✓	✓
IGMP Snooping Configuration	✓	✓	✓
MAC Forwarding Table	✓	✓	✓
Cable Diagnostics	✓	✓	✓
sFlow Analyzer (Core Switch)	-	-	✓

Model	DNH-1000	DNH-3000	DNC-5000
Product Image			
Wireless Function			
Captive Portal Authentication	Web Redirect Only, Local DB, Remote RADIUS, LDAP, External Captive Portal, POP3, Passcode, MAC Address, Click-Through, Google Login*		
IP / MAC Filter	✓	✓	✓
Auto RF Management	✓	✓	✓
Bandwidth Optimization	✓	✓	✓
Wireless Schedule	✓	✓	✓
AP Reboot Schedule	✓	✓	✓
Neighbor AP Detection	✓	✓	✓

* Google Login: DNH-1000 only

Which Nuclias is right for you?

Nuclias Unity	Nuclias Connect	Nuclias Hyper
		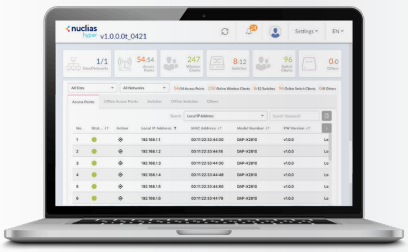
Nuclias Unity (cloud)	DNH-1000	DNC-5000
		
	DNH-3000	
Hosting		
Cloud-hosted Web dashboard	**On-premises** Hardware controller	**On-premises** Software controller
Software provision		
Free of charge	Built into the DNH-1000 and DNH-3000	DNC-5000 software for Windows or Linux
Site scale and capacity		
Single-site and multi-site Organization/site hierarchy	Multi-site management DNH-1000: up to 500 devices DNH-3000: up to 1,500 devices	Multi-site management DNC-5000: up to 2,000 devices
Managed devices		
Supported D-Link APs and switches	Supported enterprise APs and aggregation/edge switches	Supported enterprise APs and core, aggregation and edge switches

How to choose

Cloud or on-premises?

Choose Unity for cloud management without on-premises controller hardware. For on-premises management, choose Connect on a hardware controller or Hyper on a Windows or Linux host.

How many devices?

Count the APs and switches across your sites. For Connect, the DNH-1000 supports up to 500 devices and the DNH-3000 up to 1,500. For Hyper, the DNC-5000 supports up to 2,000 devices.

Which switch roles are in scope?

For on-premises management, Connect covers supported aggregation and edge switches. Use Hyper if supported core switches also need central management.

Buyer checklist

- ☐ Record the number of sites, APs, and switches.
- ☐ Identify the edge, aggregation, and core switches you want to manage.
- ☐ Check each device model against the supported devices on p. 5 (Unity) and p. 9 (Connect and Hyper).

Where to look in this catalog

Nuclias Unity APs	See p. 5
Controller compatibility and capacity	See pp. 9–10
Enterprise Access Points	See p. 14

Enterprise Access Points

D-Link’s Enterprise Access Points deliver robust and scalable solutions that adapt to diverse environments. For medium to large-scale businesses, we recommend our EAP products, which are engineered to provide reliable and high-performance wireless connectivity.

Designed to endure various environmental conditions, our EAPs are suitable for ceiling, outdoor, and wall plate installations. They offer advanced features such as fast roaming, load balancing, and enhanced security, ensuring optimal performance and uninterrupted service for all connected devices.

Our EAPs seamlessly work with Nuclias Connect, a comprehensive management platform that allows network administrators to monitor and control the network remotely. This centralized management system helps ensure consistent and reliable connectivity, boosting operational efficiency and productivity.

D-Link's enterprise access points and Nuclias Connect offer a powerful and integrated solution for modern network needs, combining superior connectivity with streamlined management for an effective and efficient network experience.

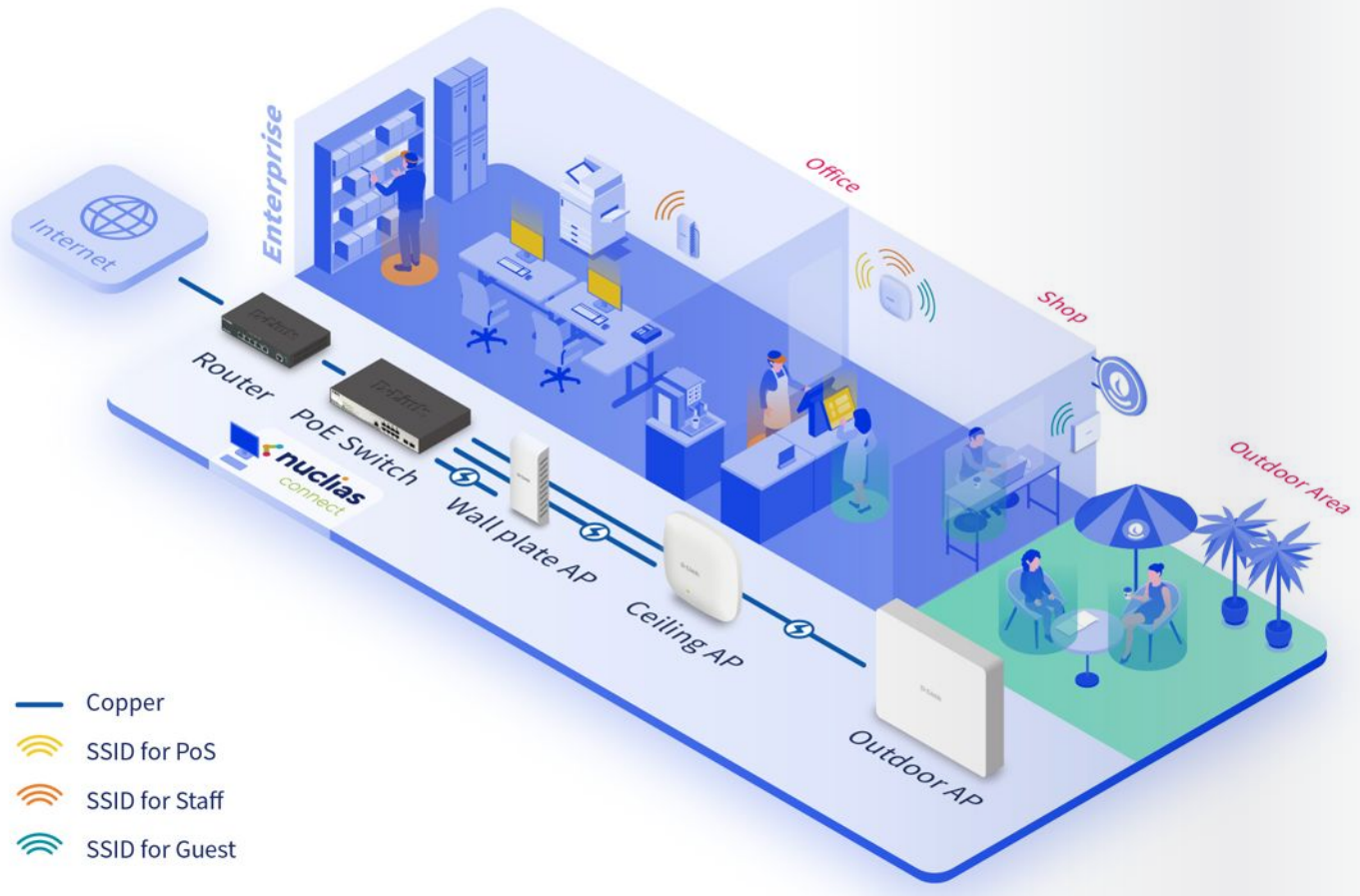

Ceiling

Ceiling / Wall-Mount

- Multiple mounting options make it easy to meet the specific needs of indoor areas



DAP-X2810 Wi-Fi 6
AX1800
- 2 x 2 + 2 x 2 (2.4 / 5G)
- 1 x GE PoE, 802.3at



DAP-X3060 Wi-Fi 6
AX3000
- 2 x 2 + 2 x 2 (2.4 / 5G)
- 1 x 2.5GE PoE, 802.3at



DAP-X2850 Wi-Fi 6
AX3600
- 4 x 4 + 4 x 4 (2.4 / 5G)
- 1 x 2.5GE PoE, 802.3at
- 1 x GE



DAP-E3620 Wi-Fi 7
BE3600
- 2 x 2 + 2 x 2 (2.4 / 5G)
- 1 x 2.5GE PoE, 802.3at



DAP-E9560 Wi-Fi 7
BE9500
- 2 x 2 + 2 x 2 + 2 x 2 (2.4 / 5 / 6G)
- 1 x 10GE PoE, 802.3bt
- 1 x 2.5GE

Wall Plate

Wall Plate

- Easily concealed and blended into the user's existing environment, ensuring minimal visual impact



DAP-2622 Wi-Fi 5
AC1200
- 2 x 2 + 2 x 2 (2.4 / 5G)
- 1 x GE PoE, 802.3at
- 2 x GE (One PoE Out)



DAP-X3060W Wi-Fi 6
AX3000
- 2 x 2 + 2 x 2 (2.4 / 5G)
- 1 x GE PoE (802.3at)
- 3 x GE (One PoE Out)

DAP-E3620W Wi-Fi 7
BE3600
- 2 x 2 + 2 x 2 (2.4 / 5G)
- 1 x 2.5GE PoE 802.3at
- 4 x GE (One PoE Out)

Outdoor

Wall / Pole-Mount

- Extending reliable Wi-Fi connectivity beyond indoor spaces

DAP-3666 Wi-Fi 5
AC1200
- 2 x 2 + 2x2 (2.4 / 5G)
- 1 x GE PoE, 802.3af
- 1 x GE

DAP-X3060OU Wi-Fi 6
AX3000
- 2 x 2 + 2 x 2 (2.4 / 5G)
- 1 x 2.5GE PoE, 802.3at



DAP-E3620OU Wi-Fi 7
BE3600
- 2 x 2 + 2 x 2 (2.4 / 5G)
- 1 x 2.5GE PoE, 802.3at
- 1 x GE



Indoor Access Points

Built for Business, Ready for the Future

Auto RF Optimization

Customizable Captive Portal

User Authentication and Roaming Capability

Centralized Management

Advanced Security

VLAN per SSID

Flexible Installation with PoE

Multiple Operation Modes

D-Link ceiling APs and wall plate APs each offer unique advantages for enhancing wireless network performance. Ceiling APs are designed to deliver robust, high-performance connectivity within buildings, ensuring reliable coverage and improved network management while maintaining strong security protocols. They are ideal for providing consistent signal strength across various indoor environments. On the other hand, wall plate APs offer a sleek, space-saving solution by integrating directly into existing electrical outlets. This design minimizes clutter and optimizes coverage by placing the access point closer to users, which can enhance signal quality and simplify maintenance. Both types of APs contribute to a more efficient and effective wireless network, tailored to meet specific environmental needs.

Explore the Possibilities

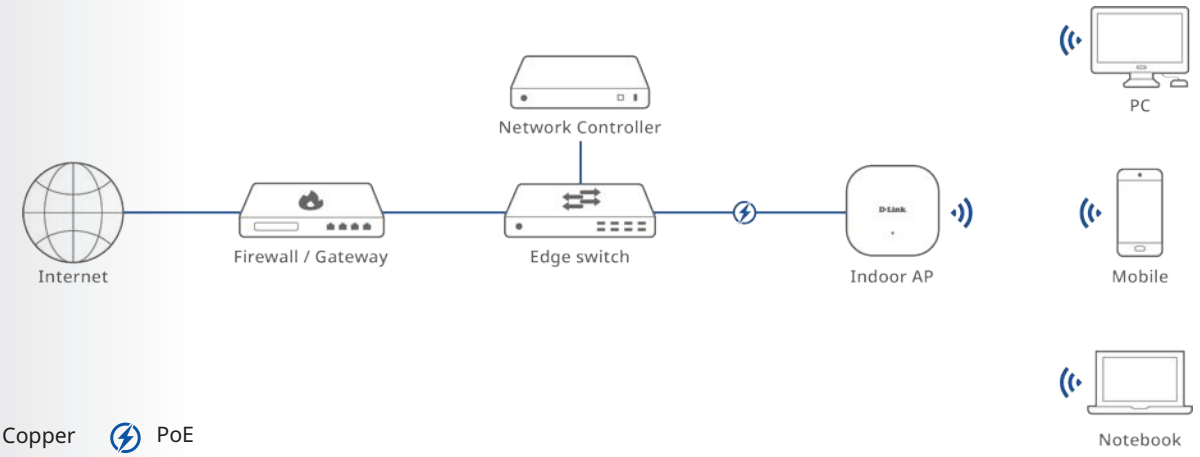

Ceiling Access Points

- Connect a higher number of devices concurrently
- Offer robust security features, including encryption, and authentication mechanisms
- With K-Lock design to prevent theft and vandalism

Wi-Fi Technology	Model	Description
Wi-Fi 6	DAP-X2810	AX1800 Ceiling Mount Access Point (2 x 2 + 2 x 2)
	DAP-X3060	AX3000 Ceiling Mount Access Point (2 x 2 + 2 x 2)
	DAP-X2850	AX3600 Ceiling Mount Access Point (4 x 4 + 4 x 4)
Wi-Fi 7	DAP-E3620	BE3600 Ceiling Mount Access Point (2 x 2 + 2 x 2)
	DAP-E9560	BE9500 Ceiling Mount Access Point (2 x 2 + 2 x 2 + 2 x 2)

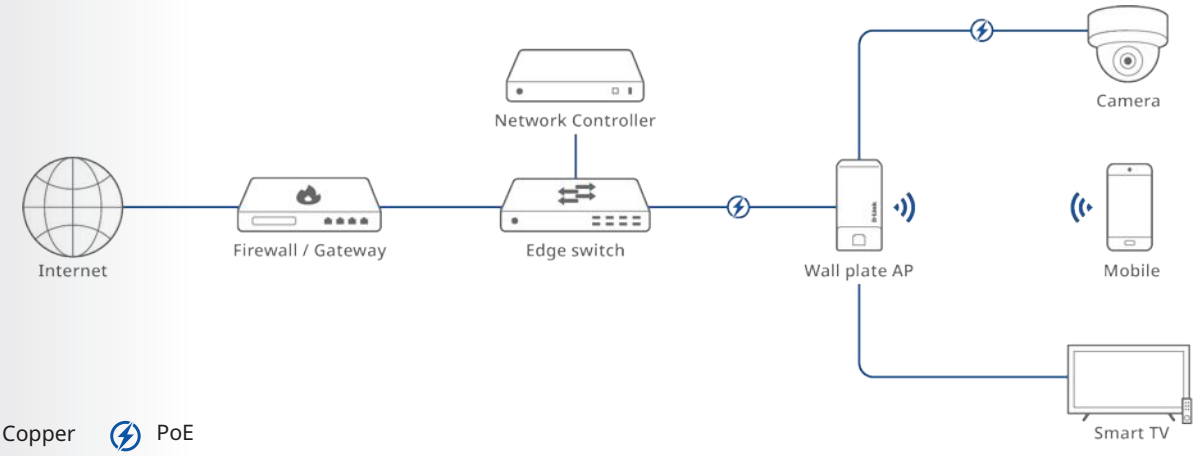

Wall Plate Access Points

- Reduce clutter and easy to maintain
- Seamlessly integrates with existing power sockets
- One PSE-out Ethernet Port for PD device

Wi-Fi Technology	Model	Description
Wi-Fi 5	DAP-2622	AC1200 Wall Plate Access Point (2 x 2 + 2 x 2)
Wi-Fi 6	DAP-X3060W	AX3000 Wall Plate Access Point (2 x 2 + 2 x 2)
Wi-Fi 7	DAP-E3620W	BE3600 Wall Plate Access Point (2 x 2 + 2 x 2)

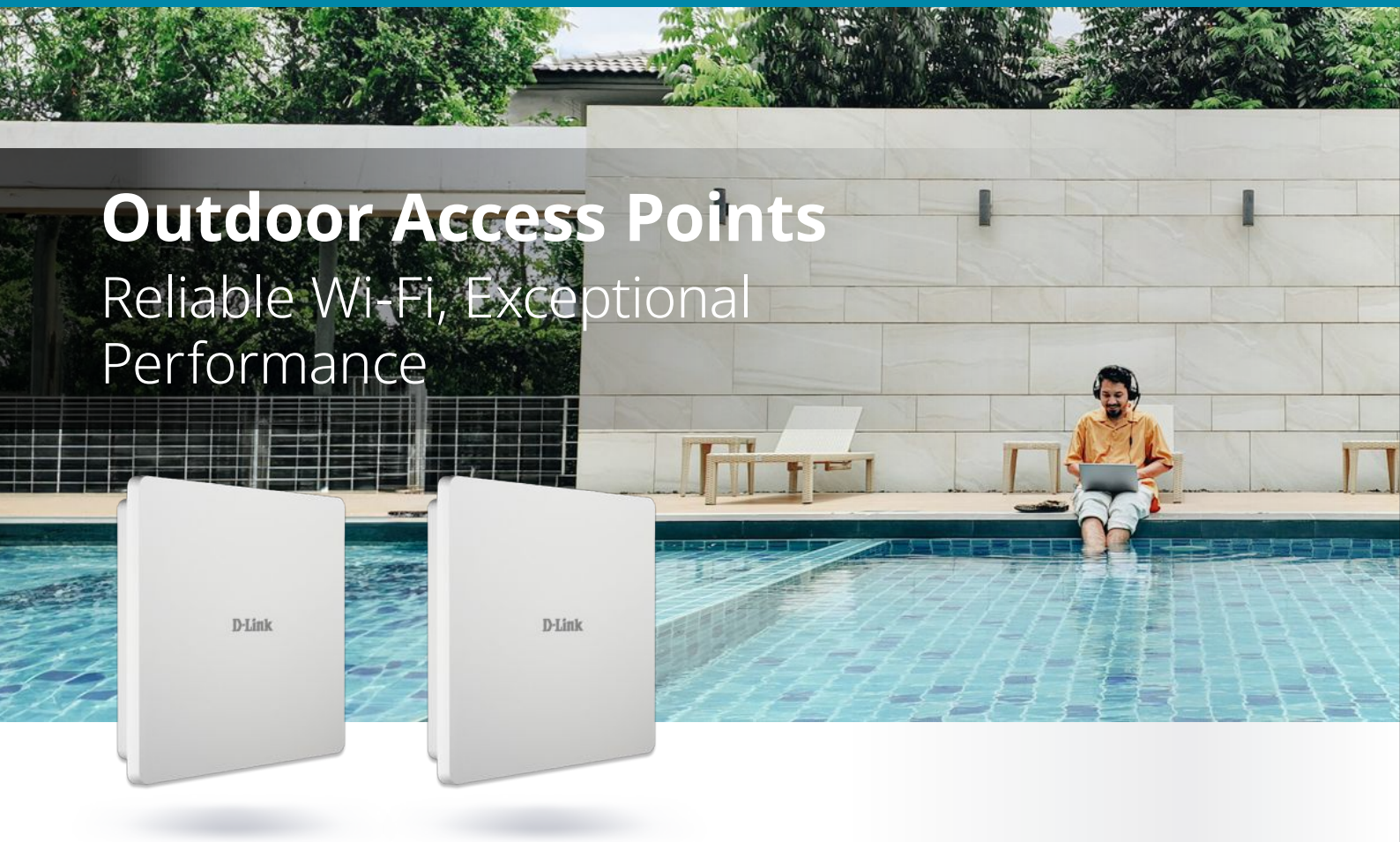

Outdoor Access Points

Reliable Wi-Fi, Exceptional Performance

Auto RF Optimization

Customizable Captive Portal

User Authentication and Roaming Capability

Centralized Management

Advanced Security

VLAN per SSID

Weatherproof & Easy-Mount Setup

Multiple Operation Modes

D-Link's outdoor access points are robust and weather-resistant, often featuring IP ratings for protection against dust and water. They are designed to provide wireless coverage in outdoor spaces such as campuses, stadiums, and public parks. These APs are capable of withstanding harsh weather conditions, including rain, wind, and extreme temperatures.

They cover large areas and offer enhanced durability, ruggedness, and fast roaming. These access points can be mounted on outdoor structures like poles, walls, or rooftops and are built to withstand UV exposure, temperature fluctuations, and moisture.

Explore the Possibilities

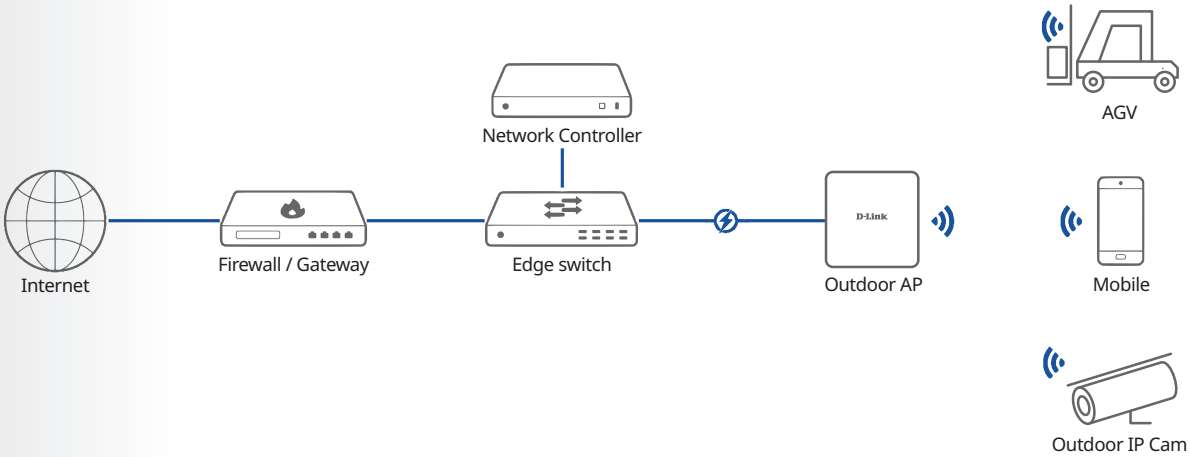

Outdoor Access Points

- IP67 / IP68 waterproof / dustproof design (by model)
- Broad operating temperature range (-30°C to 55°C / 60°C, by model)
- Versatile mounting options

Wi-Fi Technology	Model	Description
Wi-Fi 5	DAP-3666	AC1200 Outdoor Access Point (2 x 2 + 2 x 2)
Wi-Fi 6	DAP-X3060OU	AX3000 Outdoor Access Point (2 x 2 + 2 x 2)
Wi-Fi 7	DAP-E3620OU	BE3600 Outdoor Access Point (2 x 2 + 2 x 2)

Enterprise Access Points / Ceiling

	Wi-Fi 6			Wi-Fi 7	
Model	**DAP-X2810**	**DAP-X2850**	**DAP-X3060**	**DAP-E9560**	**DAP-E3620**
Product Image					
Hardware					
Environment	Ceiling	Ceiling	Ceiling	Ceiling	Ceiling
Device Interfaces	• 1 x RJ-45 console port • 1 x 10 / 100 / 1000 LAN port • Factory reset button • Power input	• 1 x RJ-45 console port • 1 x 10 / 100 / 1000 / 2.5G Ethernet (PoE) LAN port • 1 x 10 / 100 / 1000 LAN port • Factory reset button • Power input	• 1 x RJ-45 console port • 1 x 10 / 100 / 1000 / 2.5G Ethernet (PoE) LAN port • Factory reset button • Power input	• 1 x RJ-45 console port • 1 x 10 / 100 / 1000 / 2.5G / 5G / 10G Ethernet (PoE) LAN port • 1 x 10 / 100 / 1000 / 2.5G LAN port • Factory reset button • Power input	• 1 x 10 / 100 / 1000 / 2.5G Ethernet (PoE) LAN port • Factory reset button • Power input
LED	Power / Status	Power / Status	Power / Status	Power / Status	Power / Status
Antennas	2 x Internal Antennas	8 x Internal Antennas	4 x Internal Antennas	6 x Internal Antennas	4 x Internal Antennas
Antenna Gain	• 2.4 GHz: 3.2 dBi • 5 GHz: 4.3 dBi	• 2.4 GHz: 3.5 dBi • 5 GHz: 5.5 dBi	• 2.4 GHz: 3 dBi • 5 GHz: 3 dBi	• 2.4 GHz: 3.3 dBi • 5 GHz: 4.8 dBi • 6 GHz: 4.6 dBi	• 2.4 GHz: 4 dBi • 5 GHz: 4 dBi
Maximum Output Power	• 2.4 GHz: 23 dBm • 5 GHz: 26 dBm	• 2.4 GHz: 28 dBm • 5 GHz: 25.5 dBm	• 2.4 GHz: 23 dBm • 5 GHz: 22 dBm	• 2.4 GHz: 23 dBm • 5 GHz: 25 dBm • 6 GHz: 24 dBm	• 2.4 GHz: 24 dBm • 5 GHz: 23 dBm
Data Signal Rate	• 2.4 GHz: Up to 574 Mbps • 5 GHz: Up to 1201 Mbps	• 2.4 GHz: Up to 1147 Mbps • 5 GHz: Up to 2402 Mbps	• 2.4 GHz: Up to 574 Mbps • 5 GHz: Up to 2401 Mbps	• 2.4 GHz: Up to 688 Mbps • 5 GHz: Up to 2882 Mbps • 6 GHz: Up to 5764 Mbps	• 2.4 GHz: Up to 688 Mbps • 5 GHz: Up to 2882 Mbps
Functionality					
Standards	• IEEE 802.11a / b / g / n / ac / ax • IEEE 802.3at PoE	• IEEE 802.11a / b / g / n / ac / ax • IEEE 802.3at PoE	• IEEE 802.11a / b / g / n / ac / ax • IEEE 802.3at PoE	• IEEE 802.11a / b / g / n / ac /ax / be • IEEE 802.3bt PoE	• IEEE 802.11a / b / g / n / ac / ax / be • IEEE 802.3at PoE
Operating Frequency	• 2.4 - 2.483 GHz • 5.15 - 5.85 GHz	• 2.4 - 2.483 GHz • 5.15 - 5.85 GHz	• 2.4 - 2.483 GHz • 5.15 - 5.85 GHz	• 2.4 - 2.483 GHz • 5.15 - 5.85 GHz • 5.925 - 7.125 GHz	• 2.4 - 2.483 GHz • 5.15 - 5.85 GHz
Security Protocol	• WPA / WPA2 / WPA3™ Personal / Enterprise • SSID Broadcast Disable • MAC ACL	• WPA / WPA2 / WPA3™ Personal / Enterprise • SSID Broadcast Disable • MAC ACL	• WPA / WPA2 / WPA3™ Personal / Enterprise • SSID Broadcast Disable • MAC ACL	• WPA / WPA2 / WPA3™ Personal / Enterprise • SSID Broadcast Disable • MAC ACL	• WPA / WPA2 / WPA3™ Personal / Enterprise • SSID Broadcast Disable • MAC ACL
Software					
Network Management	• Web • Nuclias Unity • Nuclias hardware and software controller • SNMP	• Web • D-Link Nuclias Connect • SNMP	• Web • Nuclias Unity • Nuclias hardware and software controller • SNMP	• Web • Nuclias Unity • Nuclias hardware and software controller • SNMP	• Web • Nuclias Unity • Nuclias hardware and software controller • SNMP
Physical					
Power Supply	• IEEE 802.3at PoE • 12V / 2.5A (Optional power adapter)	• IEEE 802.3at PoE • 12V / 2.5A (Optional power adapter)	• IEEE 802.3at PoE • 12V / 2.5A (Optional power adapter)	• IEEE 802.3bt PoE • USB Type C (Optional power adapter)	• IEEE 802.3at PoE • 12V / 2A (Optional power adapter)
Max. Power Consumption	19.44 W	19.44W	16.7W	27.756W	< 20W
MTBF	> 30,000 hours	> 30,000 hours	> 30,000 hours	> 30,000 hours	> 30,000 hours
Operating Temperature	0˚C to 40˚C (32˚F to 104˚F)	0˚C to 40˚C (32˚F to 104˚F)	0˚C to 40˚C (32˚F to 104˚F)	0˚C to 40˚C (32˚F to 104 ˚F)	0 ˚C to 40 ˚C (32 ˚F to 104 ˚F)
Storage Temperature	-20˚C to 65 ˚C (-4˚F to 149˚F)	-20˚C to 65˚C (-4˚F to 149˚F)	-20˚C to 65˚C (-4˚F to 149˚F)	-20˚C to 65˚C (-4˚F to 149˚F)	-20 ˚C to 65 ˚C (-4 ˚F to 149˚F)
Operating Humidity	10% to 90%	10% to 90%	10% to 90%	10% to 90%	10% to 90%
Storage Humidity	5% to 95%	5% to 95%	5% to 95%	5% to 95%	5% to 95%
Weight	477.4 g (1.05 lb)	763.8 g (1.7 lb)	612.4 g (1.35 lb)	1167 g (2.57 lb)	550 g (1.21 lb)
Dimension	170 x 170 x 28 mm (6.69 x 6.69 x 1.1 in)	212.4 x 212.4 x 46.7 mm (8.36 x 8.36 x 1.8 in)	190 x 190 x 42.8 mm (7.48 x 7.48 x 1.68 in)	223.04 x 223.04 x 46.7 mm (8.78 x 8.78 x 1.84 in)	186 x 186 x 37 mm (7.32 × 7.32 × 1.46 in)
Certification	CE, FCC	CE, FCC	CE, FCC, Wi-Fi, IEC 60601-1	CE, FCC	CE

Enterprise Access Points / Wall Plate

	Wi-Fi 5	Wi-Fi 6	Wi-Fi 7
Model	**DAP-2622**	**DAP-X3060W**	**DAP-E3620W**
Product Image			
Hardware			
Environment	Wall Plate	Wall Plate	Wall Plate
Device Interfaces	• 1 x 10 / 100 / 1000 Ethernet (PoE) LAN port for Uplink • 1 x 10 / 100 / 1000 Ethernet (PoE Out) LAN port for Downlink • 1 x 10 / 100 / 1000 Ethernet LAN port for Downlink • Factory reset button	• 1 x 10 / 100 / 1000 Ethernet (PoE) LAN port for Uplink • 1 x 10 / 100 / 1000 Ethernet (PoE Out) LAN port for Downlink • 2 x 10 / 100 / 1000 Ethernet LAN port for Downlink • Factory reset button	• 1 x 10 / 100 / 1000 / 2500 Ethernet (PoE) LAN port for Uplink • 1 x 10 / 100 / 1000 Ethernet (PoE Out) LAN port for Downlink • 3 x 10 / 100 / 1000 Ethernet LAN port for Downlink • Factory reset button
LED	Power / Status	Power / Status	Power / Status
Antennas	2 x Internal Antennas	2 x Internal Antennas	4 x Internal Antennas
Antenna Gain	• 2.4 GHz: 2.8 dBi • 5 GHz: 4.1 dBi	• 2.4 GHz: 2.98 dBi • 5 GHz: 4.99 dBi	• 2.4 GHz: 3 dBi • 5 GHz: 3.3 dBi
Maximum Output Power	• 2.4 GHz: 20 dBm • 5 GHz: 20 dBm	• 2.4 GHz: 22 dBm • 5 GHz: 21 dBm	• 2.4 GHz: 24 dBm • 5 GHz: 23 dBm
Data Signal Rate	• 2.4 GHz: Up to 300 Mbps • 5 GHz: Up to 867 Mbps	• 2.4 GHz: Up to 574 Mbps • 5 GHz: Up to 2402 Mbps	• 2.4 GHz: Up to 688 Mbps • 5 GHz: Up to 2882 Mbps
Functionality			
Standards	• IEEE 802.11a / b / g / n / ac • IEEE 802.3at PoE	• IEEE 802.11a / b / g / n / ac / ax • IEEE 802.3at PoE	• IEEE 802.11a / b / g / n /ac / ax / be • IEEE 802.3at PoE
Operating Frequency	• 2.4 - 2.483 GHz • 5.15 - 5.85 GHz	• 2.4 - 2.483 GHz • 5.15 - 5.85 GHz	• 2.4 - 2.483 GHz • 5.15 - 5.85 GHz
Security Protocol	• WPA / WPA2™ Personal / Enterprise • WEP 64 /128-bit • SSID Broadcast Disable • MAC ACL	• WPA / WPA2 / WPA3™ Personal / Enterprise • SSID Broadcast Disable • MAC ACL	• WPA/WPA2/WPA3™ Personal / Enterprise • SSID Broadcast Disable • MAC ACL
Software			
Network Management	• Web • D-Link Nuclias Connect	• Web • Nuclias Unity • Nuclias hardware and software controller • SNMP	• Web • Nuclias Unity • Nuclias hardware and software controller • SNMP
Physical			
Power Supply	• IEEE 802.3at PoE	• IEEE 802.3at PoE	• IEEE 802.3at PoE
Max. Power Consumption	9.5W, 21.5W (including PoE output)	16W, 23W (including PoE output)	< 17W
MTBF	> 30,000 hours	> 30,000 hours	> 30,000 hours
Operating Temperature	0˚C to 40˚C (32˚F to 104˚F)	0 ˚C to 40 ˚C (32 ˚F to 104 ˚F)	0 ˚C to 40 ˚C (32 ˚F to 104 ˚F)
Storage Temperature	-20˚C to 65˚C (-4˚F to 149˚F)	-20˚C to 65 ˚C (-4 ˚F to 149˚F)	-20 ˚C to 65 ˚C (-4 ˚F to 149˚F)
Operating Humidity	10% to 90%	10% to 90%	10% to 90%
Storage Humidity	5% to 95%	5% to 95%	5% to 95%
Weight	212g (0.49 lb)	417g (0.92 lb)	260 g (0.573 lb)
Dimension	154.1 x 95 x 27.4 mm (6 x 3.7 x 1 in)	195.68 x 120.72 x 40.2 mm (7.7 x 4.75 x 1.58 in)	160 x 86 x 29 mm (6.30 × 3.39 × 1.14 in)
Certifications	CE, FCC	CE, FCC	CE

Smart Access Points

Seamless Wi-Fi Expansion, Simplified Management



Centralized Management

Seamless Mesh Coverage

Easy to Manage

Flexible Installation with PoE

Easy Setup

WPA2 / WPA3 Security

Guest Wi-Fi

Captive Portal

D-Link's Smart AP utilizes Wi-Fi 6 and Wi-Fi 7 technology to extend wireless coverage and provide high-speed connections throughout a building. It offers reliable coverage, efficient network management, and robust security. The Smart AP can be centrally managed via business routers and features Mesh capability to optimize connections, ensuring consistent signal strength throughout all areas.

Explore the Possibilities

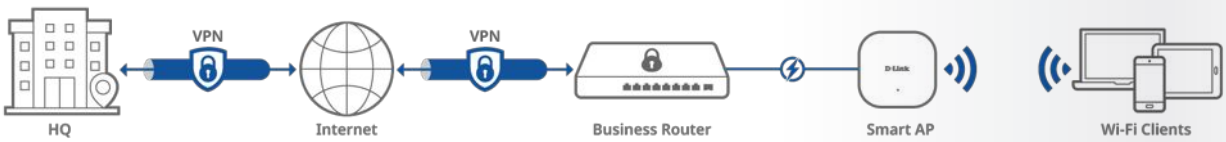

Copper PoE

Smart Access Points

Model	DBR-X3000-AP	DBR-E3600-AP
Product Image		
Hardware		
Environment	Ceiling	Ceiling
Device Interfaces	• 1 x 10 / 100 / 1000 Ethernet (PoE) LAN port • Factory reset button • Power input	• 1 x 2.5GE LAN PoE port • 1 x GE LAN port • 1 x Power connector • 1 x Reset button
LED	Power / Status	Power / Status
Antennas	3 x Internal Dual-band Antennas	• 2 x Internal Dual-band Antennas • 1 x 5 GHz Rx Antenna
Antenna Gain	• 2.4 GHz: 3 dBi • 5 GHz: 3 dBi	• 2.4 GHz: 4 dBi • 5 GHz: 4 dBi
Data Signal Rate	• 2.4 GHz: Up to 574 Mbps • 5 GHz: Up to 2402 Mbps	• 2.4 GHz: Up to 688 Mbps • 5 GHz: Up to 2882 Mbps
Functionality		
Standards	• IEEE 802.11a / b / g / n / ac / ax • IEEE 802.3at PoE	• IEEE 802.11a/b/g/n/ac/ax/be • IEEE 802.3at PoE
Operating Frequency	• 2.4 - 2.483 GHz • 5.15 - 5.35 GHz • 5.47 - 5.85 GHz	• 2.4 - 2.483 GHz • 5.15 - 5.35 GHz • 5.47 - 5.85 GHz
Security Protocol	• WPA / WPA2 / WPA3™ Personal / Enterprise • SSID Broadcast Disable • MAC ACL	• WPA / WPA2 / WPA3™ Personal / Enterprise • SSID Broadcast Disable • MAC ACL
Software		
Network Management	• Web (Managed by DBR-600-P, DBR-700)	• Web (Managed by DBR-600-P, DBR-700)
Physical		
Power Supply	• IEEE 802.3at PoE • 12V / 2A (Optional power adapter)	• IEEE 802.3at PoE • 12V / 1.5A (Optional power adapter)
MTBF	> 30,000 hours	> 30,000 hours
Operating Temperature	0 ˚C to 40 ˚C (32 ˚F to 104 ˚F)	5°C to 40°C (41°F to 104°F)
Storage Temperature	-10°C to 70°C (14°F to 158°F)	-10 to 70 °C (14 to 158 °F)
Operating Humidity	10% to 90%	10% to 90%
Storage Humidity	0% to 95% non-condensing	5% to 95%
Weight	340g	400g
Dimension	170 x 170 x 33.7 mm	225 x 220 x 42 mm
Certification	CE, FCC, IC	CE, EN18031



Business Routers

Tailored Innovative Design, Made for Small Businesses



2.5G Interface

PoE Convenience

Multi-WAN Redundancy

VPN Protection

Firewall Protection

AP Management

Intuitive User-interface

D-Link business routers feature a next-generation design with extensive functionality tailored for small and midsize offices. It offers flexible deployment and easy extension of the existing network infrastructure. These routers provide enough power to support multiple high-demand devices in environments with substantial connectivity requirements. PoE interfaces on the DBR-600-P provide a robust solution for powering devices while ensuring optimal speed and network flexibility.

Explore the Possibilities



Copper PoE

Business PoE Routers

- PoE reduces the need for additional power outlets and simplifies device deployment
- Built-in management platform for easy setup, configuration, and AP monitoring



DBR-600-P

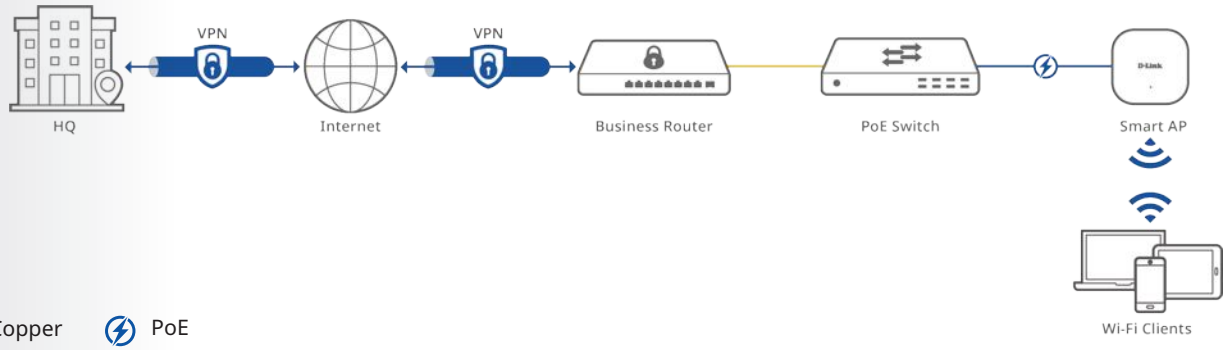

Copper PoE

Business Routers

- Powerful capabilities deliver high performance for larger business applications
- Built-in management platform for easy setup, configuration, and AP monitoring



DBR-700

Business Routers

Model	DBR-600-P	DBR-700
Product Image		
Hardware		
Ethernet Interface	• 1 x 10 / 100 / 1000 / 2.5G WAN port • 7 x 10 / 100 / 1000 / 2500 Mbps LAN ports • 1 x 10 / 100 / 1000 / 2500 Mbps configurable port	• 1 x 10 / 100 / 1000 / 2.5G WAN port • 6 x 10 / 100 / 1000 / 2500 Mbps LAN ports • 1 x 10 / 100 / 1000 / 2500 Mbps configurable port 1 x 2.5G SFP
PoE Port	8 (123W Power Budget)	-
USB Port	USB 3.0	-
Console Port	✓ (debug only)	✓ (debug only)
Internet Connection Type		
Static / Dynamic IP	✓	✓
PPPoE	✓	✓
Firewall System		
Dynamic DNS	✓	✓
NAT / Port Forwarding	✓	✓
MAC / IP Filtering	✓	✓
URL Filtering	✓	✓
Intrusion Prevention System (IPS)	✓	✓
Firewall Policies	✓	✓
VPN		
IPSec	✓	✓
PPTP	✓	✓
L2TP	✓	✓
WireGuard	✓	✓
Networking		
DHCP Server / Client	✓	✓
VLAN	✓	✓
WAN Failover	✓	✓
Outbound Load Balancing	✓	✓
Dynamic Route	✓	✓
Static Route	✓	✓
Captive Portal	Click-Through / RADIUS	Click-Through / RADIUS
RADIUS Authentication	✓	✓
Performance		
Firewall Throughput	2000 Mbps	2450 Mbps
VPN Throughput	300 Mbps	400 Mbps
Concurrent Session	65535	200000
New Session (Per Second)	4000	4000
Maximum IPSec VPN Tunnel	50	100
Maximum PPTP / L2TP Tunnel	32	32

Model	DBR-600-P	DBR-700
Product Image		
Wi-Fi		
AP Managed	Up to 10 DBR-X3000-AP	Up to 15 DBR-X3000-AP
System Management		
Web-Based User Interface	✓	✓
Physical & Environment		
Power Input	54V / 2.7A	12V / 2A adapter
Dimensions (L x W x H)	120 x 190 x 38 mm	126 x 280 x 44 mm
Operating Temperature	0 to 40 ˚C	0 to 40 ˚C
Storage Temperature	-10 to 70 °C	-10 to 70 °C
Operating Humidity	10% to 90% non-condensing	10% to 90% non-condensing
Storage Humidity	0% to 95% non-condensing	0% to 95% non-condensing

D-Link

Contact and support
Contact us: **dlink-mea.com/contact**
Technical support: **dlink-mea.com/support**
Where to buy: **dlink-mea.com/en/where-to-buy**

Images are for illustrative purposes only. The actual products can differ in appearance. Information is subject to change without notice. D-Link and the D-Link logo are trademarks or registered trademarks of D-Link. All other third-party marks mentioned herein may be trademarks of their respective owners.

Copyright ©2026 D-Link Corporation. All Rights Reserved.

Website
All D-Link products and solutions
dlink-mea.com

Digital copy
This catalog as a PDF on your phone
dlink-mea.com/wireless-catalog